株式会社OJK［オージェーケー］

OJK　All Terrain Crane

KATO ALLTERR® オルター®

# KA-2000

●オルターは、KATOの登録商標です。

株式会社OJK
http://ojk-inc.com
〒143-0016
東京都大田区大森北5-13-4
TEL.03-5762-0101(代)

OJK All Terrain Crane
KATO KA-2000

■主要寸法

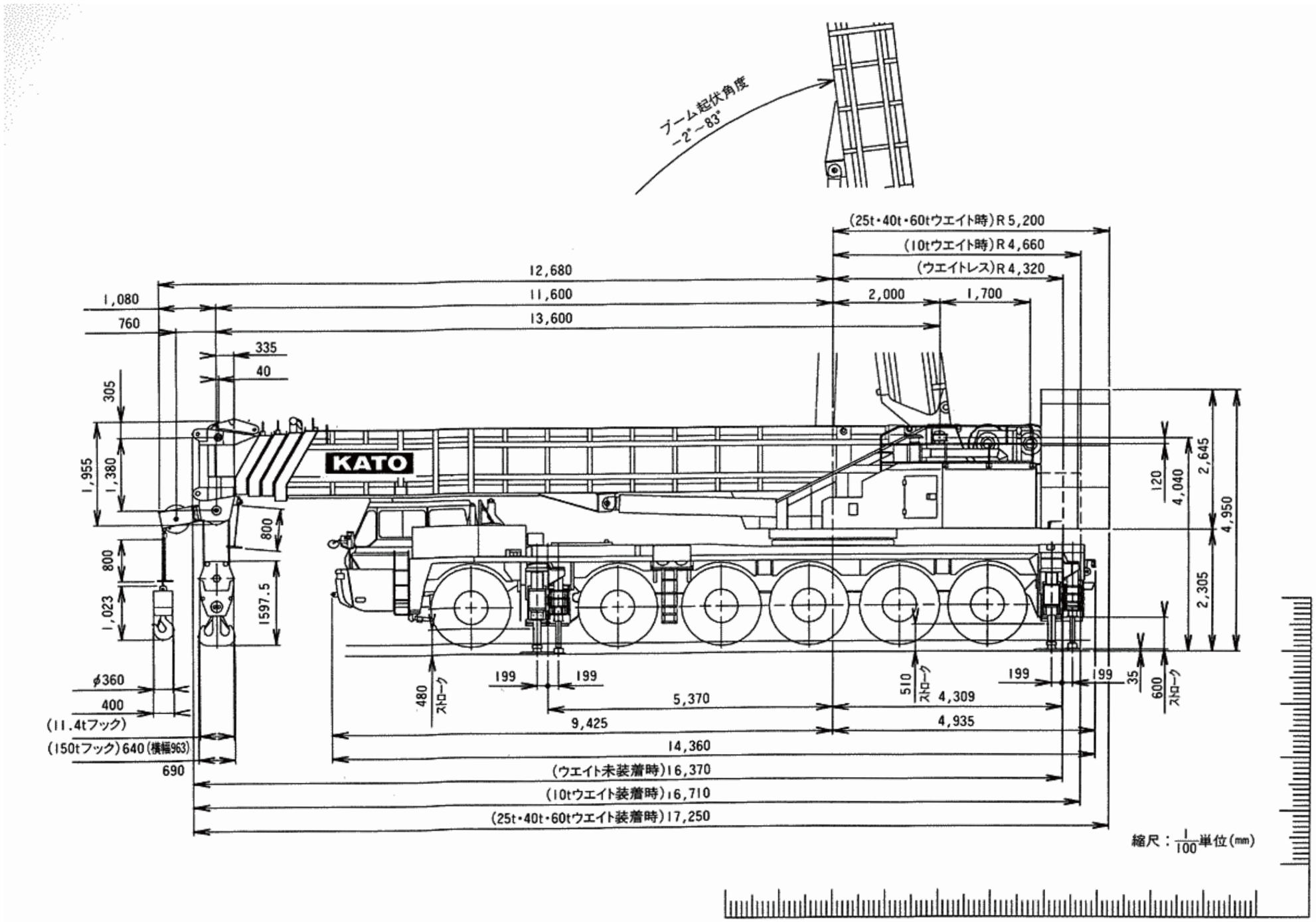



ojk-inc.com

OJK All Terrain Crane
KATO KA-2000
OJK 株式会社OJK［オージェーケー］

## ■構内走行外観寸法

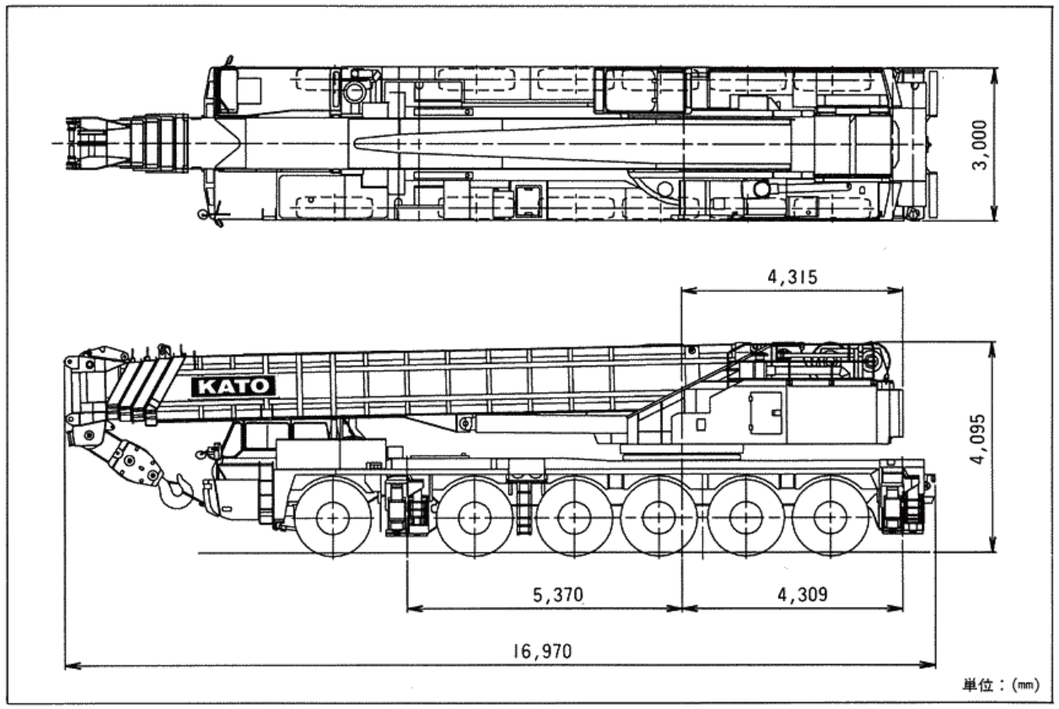


単位：(mm)

## ■公道走行、台車寸法

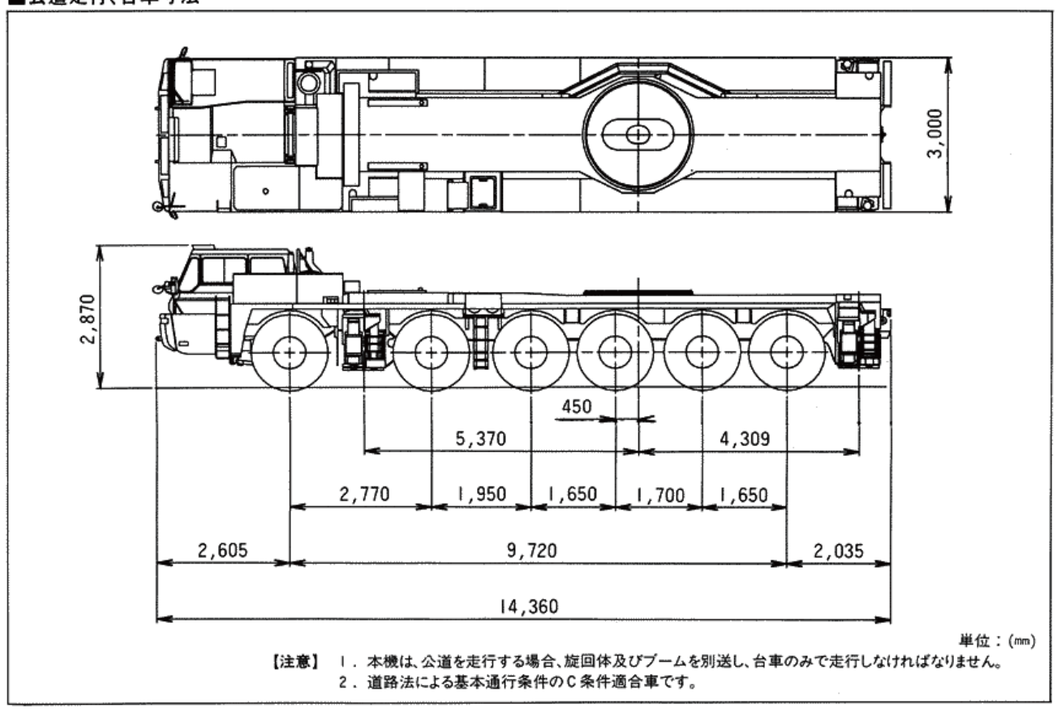


単位：(mm)

【注意】 1．本機は、公道を走行する場合、旋回体及びブームを別送し、台車のみで走行しなければなりません。
2．道路法による基本通行条件のC条件適合車です。

## ■アウトリガ張出し寸法

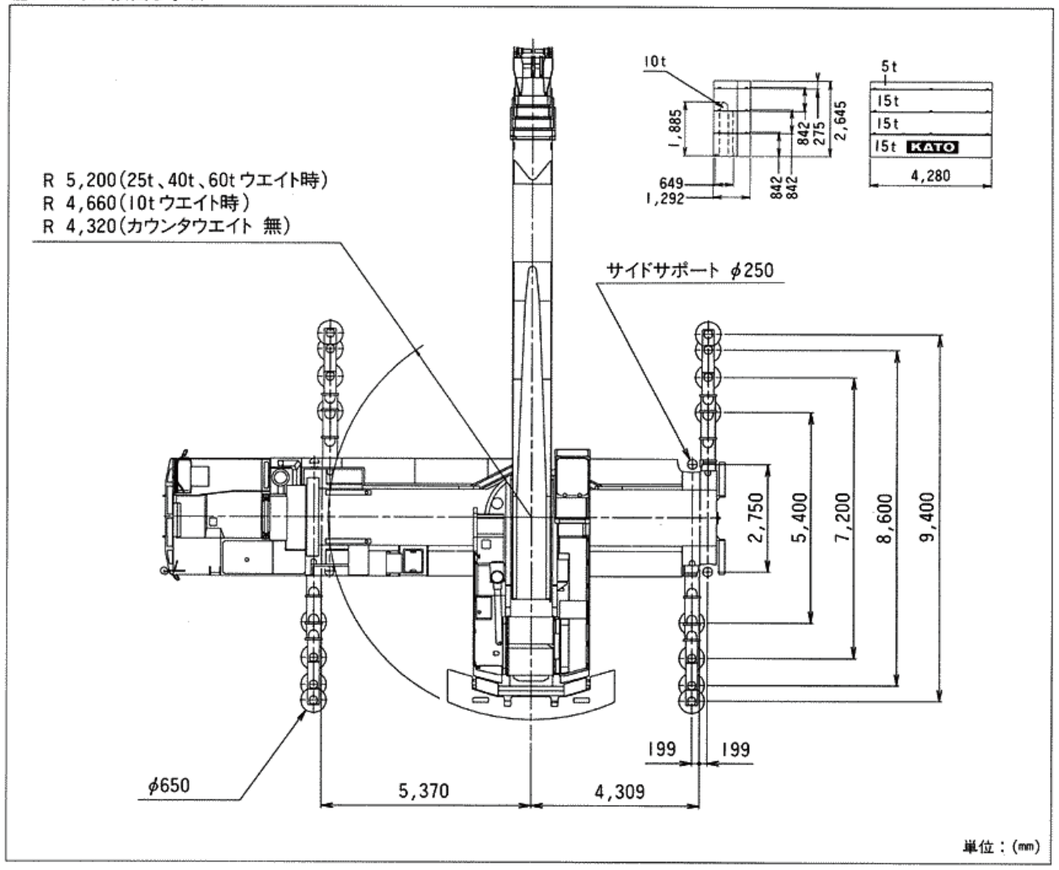


単位：(mm)

## ■最小直角道路幅(構内走行姿勢)

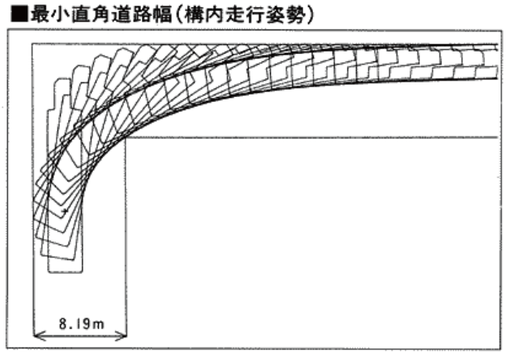


## ■小人数で短時間でスピーディにできるカトウ独自の脱着方式

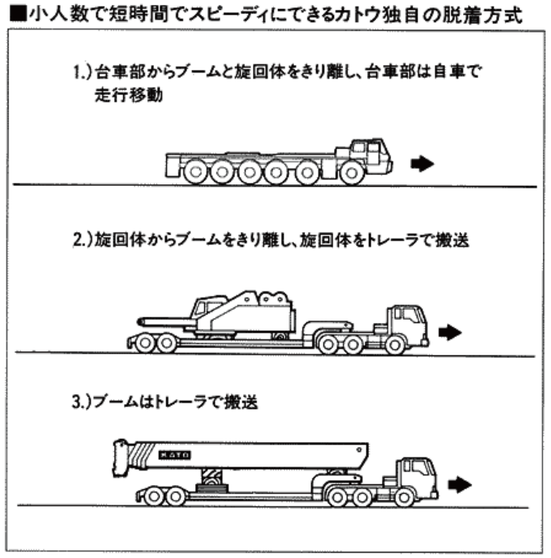



ojk-inc.com

OJK All Terrain Crane
KATO KA-2000

■ヘビーリフトジブ振出しおよび作業姿勢

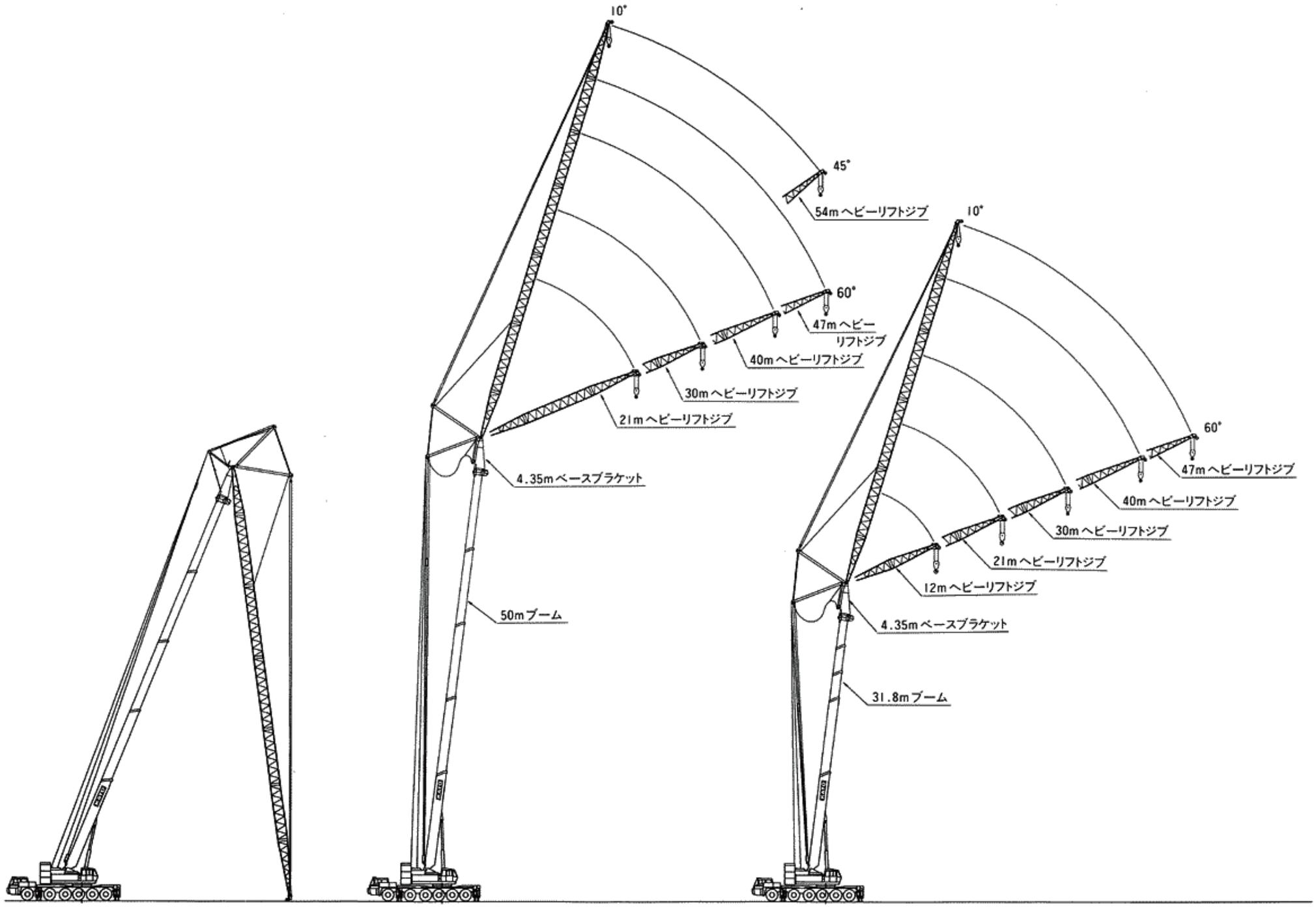



ojk-inc.com

OJK All Terrain Crane
KATO KA-2000
OJK 株式会社OJK［オージェーケー］

# ブーム

## ■作業半径揚程図

Ⓐ 13.6mブーム
Ⓑ 18.15mブーム
Ⓒ 22.7mブーム
Ⓓ 31.8mブーム
Ⓔ 40.9mブーム
Ⓕ 50.0mブーム
Ⓖ 13.6mブーム＋ルースタシーブ
Ⓗ 18.15mブーム＋ルースタシーブ
Ⓘ 22.7mブーム＋ルースタシーブ
Ⓙ 31.8mブーム＋ルースタシーブ
Ⓚ 40.9mブーム＋ルースタシーブ
Ⓛ 50.0mブーム＋ルースタシーブ

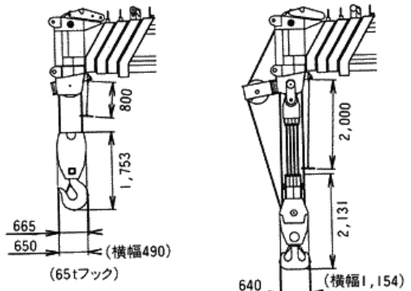


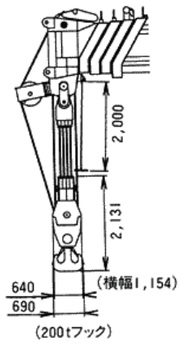


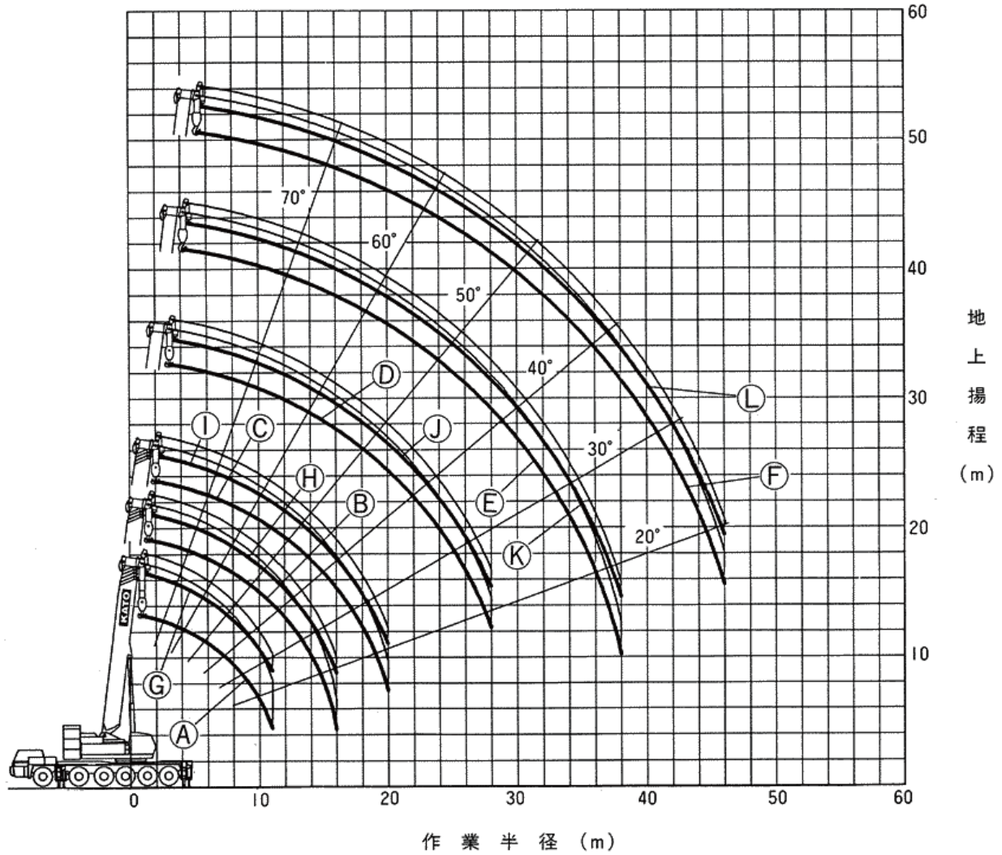


注）本図は、ブームのたわみを含んでいません。

# ブーム

## ■定格総荷重表

### 13.6m～50mブーム

| 作業半径 (m) | 13.6mブーム 性能区分 A | B | C | D | E | F | 18.15mブーム 性能区分 A | B | C | D | E | F | 22.7mブーム 性能区分 A | B | C | D | E | F | 31.8mブーム 性能区分 A | B | C | D | E | F | 40.9mブーム 性能区分 A | B | C | D | E | F | 50mブーム 性能区分 A | B | C | D | E | F |
|---|---|---|---|---|---|---|---|---|---|---|---|---|---|---|---|---|---|---|---|---|---|---|---|---|---|---|---|---|---|---|---|---|---|---|---|---|
| 3.0 | 200.0 | 200.0 | 200.0 | 200.0 | 200.0 | 200.0 | | | | | | | | | | | | | | | | | | | | | | | | | | | | | | |
| 3.5 | 179.6 | 179.6 | 179.6 | 179.6 | 177.7 | 177.7 | 120.0 | 120.0 | 120.0 | 120.0 | 120.0 | 120.0 | | | | | | | | | | | | | | | | | | | | | | | | |
| 4.0 | 166.0 | 166.0 | 166.0 | 163.9 | 153.5 | 143.2 | 120.0 | 120.0 | 120.0 | 120.0 | 120.0 | 120.0 | 120.0 | 120.0 | 120.0 | 120.0 | 120.0 | 104.6 | | | | | | | | | | | | | | | | | | |
| 4.5 | 154.3 | 154.3 | 154.3 | 143.9 | 132.5 | 110.7 | 120.0 | 120.0 | 120.0 | 120.0 | 120.0 | 96.1 | 120.0 | 120.0 | 120.0 | 120.0 | 120.0 | 84.0 | | | | | | | | | | | | | | | | | | |
| 5.0 | 144.2 | 144.2 | 142.2 | 128.0 | 119.7 | 84.2 | 120.0 | 120.0 | 120.0 | 120.0 | 118.3 | 78.6 | 120.0 | 120.0 | 120.0 | 120.0 | 117.0 | 69.3 | 65.0 | 65.0 | 65.0 | 65.0 | 65.0 | 62.4 | | | | | | | | | | | | |
| 6.0 | 127.4 | 127.4 | 115.9 | 104.1 | 97.2 | 55.3 | 120.0 | 120.0 | 111.6 | 102.7 | 95.8 | 53.4 | 115.9 | 115.9 | 113.2 | 101.5 | 94.5 | 49.8 | 65.0 | 65.0 | 65.0 | 65.0 | 65.0 | 46.6 | | | | | | | | | | | | |
| 7.0 | 113.7 | 107.3 | 97.1 | 87.0 | 81.1 | 39.8 | 107.7 | 101.9 | 95.7 | 85.6 | 79.7 | 38.2 | 103.2 | 100.9 | 94.5 | 84.4 | 78.5 | 36.7 | 65.0 | 65.0 | 65.0 | 65.0 | 65.0 | 36.1 | 60.0 | 60.0 | 60.0 | 60.0 | 60.0 | 33.9 | | | | | | |
| 8.0 | 100.4 | 92.0 | 83.1 | 74.3 | 69.1 | 30.2 | 97.2 | 89.9 | 81.7 | 72.8 | 67.6 | 28.7 | 91.9 | 88.9 | 80.4 | 71.6 | 66.4 | 27.4 | 65.0 | 65.0 | 65.0 | 65.0 | 65.0 | 28.7 | 60.0 | 60.0 | 60.0 | 60.0 | 60.0 | 27.4 | | | | | | |
| 9.0 | 90.2 | 80.1 | 72.2 | 64.3 | 56.6 | 23.7 | 85.3 | 78.6 | 70.7 | 62.9 | 55.1 | 22.2 | 82.5 | 77.4 | 69.5 | 61.7 | 53.9 | 21.0 | 65.0 | 65.0 | 65.0 | 64.0 | 56.3 | 23.1 | 60.0 | 60.0 | 60.0 | 60.0 | 57.1 | 22.4 | 35.0 | 35.0 | 35.0 | 35.0 | 35.0 | 21.4 |
| 10.0 | 80.1 | 70.6 | 63.5 | 56.4 | 47.4 | 19.0 | 76.7 | 69.1 | 62.0 | 54.9 | 45.9 | 17.5 | 74.7 | 67.9 | 60.8 | 53.7 | 44.7 | 16.3 | 65.0 | 65.0 | 63.1 | 56.1 | 47.0 | 18.6 | 55.5 | 55.5 | 55.5 | 55.5 | 48.2 | 18.5 | 35.0 | 35.0 | 35.0 | 35.0 | 35.0 | 17.9 |
| 11.0 | 66.9 | 62.9 | 56.5 | 50.0 | 40.4 | 15.5 | 69.9 | 61.3 | 54.8 | 48.4 | 38.9 | 13.9 | 68.1 | 60.1 | 53.7 | 47.2 | 37.8 | 12.8 | 60.2 | 60.2 | 56.0 | 49.5 | 40.0 | 15.0 | 51.1 | 51.1 | 51.1 | 50.7 | 41.1 | 15.3 | 35.0 | 35.0 | 35.0 | 35.0 | 35.0 | 15.0 |
| 12.0 | | | | | | | 62.7 | 54.8 | 47.8 | 42.0 | 33.4 | 11.1 | 61.5 | 53.6 | 46.6 | 40.8 | 33.3 | 9.9 | 55.2 | 55.2 | 48.9 | 43.3 | 34.4 | 12.2 | 47.3 | 47.3 | 47.3 | 44.6 | 35.5 | 12.7 | 35.0 | 35.0 | 35.0 | 35.0 | 35.0 | 12.5 |
| 14.0 | | | | | | | 51.4 | 44.6 | 36.3 | 30.7 | 24.1 | 6.5 | 50.2 | 43.4 | 35.2 | 29.5 | 22.9 | 5.2 | 47.0 | 45.7 | 37.3 | 31.9 | 25.3 | 7.8 | 41.1 | 41.1 | 38.5 | 33.2 | 26.6 | 8.6 | 33.9 | 33.9 | 33.9 | 33.9 | 27.5 | 8.8 |
| 16.0 | | | | | | | 32.5 | 32.5 | 28.6 | 23.2 | 17.8 | | 41.8 | 35.8 | 27.5 | 22.0 | 16.6 | | 40.6 | 38.1 | 29.5 | 24.2 | 18.8 | | 36.2 | 36.2 | 30.6 | 25.4 | 20.0 | | 29.6 | 29.6 | 29.6 | 26.3 | 20.9 | |
| 18.0 | | | | | | | | | | | | | 35.2 | 30.0 | 21.9 | 16.8 | 12.2 | | 35.6 | 32.1 | 23.8 | 18.9 | 14.3 | | 31.8 | 31.8 | 24.9 | 20.0 | 15.4 | | 26.6 | 26.6 | 25.6 | 20.8 | 16.2 | |
| 20.0 | | | | | | | | | | | | | 26.9 | 25.1 | 17.8 | 13.1 | 8.6 | | 31.4 | 26.9 | 19.6 | 15.0 | 10.9 | | 26.3 | 27.9 | 20.6 | 16.0 | 12.0 | | 23.7 | 23.7 | 21.3 | 16.8 | 12.8 | |
| 22.0 | | | | | | | | | | | | | | | | | | | 27.8 | 22.8 | 16.3 | 12.0 | 8.1 | | 25.3 | 23.7 | 17.2 | 13.0 | 9.3 | | 21.2 | 21.2 | 17.9 | 13.7 | 10.1 | |
| 24.0 | | | | | | | | | | | | | | | | | | | 24.3 | 19.5 | 13.6 | 9.6 | 5.7 | | 22.8 | 20.4 | 14.5 | 10.6 | 7.0 | | 19.1 | 19.1 | 15.2 | 11.3 | 7.9 | |
| 26.0 | | | | | | | | | | | | | | | | | | | 21.0 | 16.8 | 11.4 | 7.5 | | | 20.6 | 17.6 | 12.3 | 8.6 | 5.0 | | 17.3 | 17.3 | 12.9 | 9.3 | 5.9 | |
| 28.0 | | | | | | | | | | | | | | | | | | | 18.4 | 14.6 | 9.6 | 5.6 | | | 18.8 | 15.4 | 10.5 | 6.8 | 3.3 | | 15.8 | 15.8 | 11.1 | 7.5 | 4.2 | |
| 30.0 | | | | | | | | | | | | | | | | | | | | | | | | | 16.9 | 13.4 | 8.9 | 5.1 | | | 14.4 | 14.0 | 9.5 | 5.9 | | |
| 32.0 | | | | | | | | | | | | | | | | | | | | | | | | | 15.0 | 11.8 | 7.4 | 3.7 | | | 13.2 | 12.3 | 8.1 | 4.5 | | |
| 34.0 | | | | | | | | | | | | | | | | | | | | | | | | | 13.3 | 10.4 | 6.1 | | | | 12.2 | 10.9 | 6.8 | 3.2 | | |
| 36.0 | | | | | | | | | | | | | | | | | | | | | | | | | 11.9 | 9.1 | 4.9 | | | | 11.2 | 9.6 | 5.5 | | | |
| 38.0 | | | | | | | | | | | | | | | | | | | | | | | | | 8.4 | 8.0 | 3.9 | | | | 10.4 | 8.5 | 4.4 | | | |
| 40.0 | | | | | | | | | | | | | | | | | | | | | | | | | | | | | | | 9.6 | 7.4 | 3.5 | | | |
| 42.0 | | | | | | | | | | | | | | | | | | | | | | | | | | | | | | | 8.9 | 6.4 | | | | |
| 44.0 | | | | | | | | | | | | | | | | | | | | | | | | | | | | | | | 7.9 | 5.4 | | | | |
| 46.0 | | | | | | | | | | | | | | | | | | | | | | | | | | | | | | | 6.6 | 4.5 | | | | |
| θ(°) | 0~83 | 0~83 | 0~83 | 0~83 | 0~83 | 10~83 | 0~83 | 0~83 | 0~83 | 0~83 | 5~83 | 23~83 | 10~83 | 10~83 | 10~83 | 10~83 | 10~83 | 45~83 | 10~83 | 10~83 | 10~83 | 10~83 | 32~83 | 59~83 | 10~83 | 10~83 | 10~83 | 24~83 | 41~83 | 64~83 | 13~83 | 13~83 | 30~83 | 40~83 | 52~83 | 70~83 |
| フック種類 | 200 ton | | | | | | 150 ton | | | | | | | | | | | | 150 ton | | | | | | 65 ton | | | | | | 65 ton | | | | | |
| フック重量 | 2550 kg | | | | | | 1850 kg | | | | | | | | | | | | 1850 kg | | | | | | 1000 kg | | | | | | 1000 kg | | | | | |
| 巻掛本数 | 22 本 | | | | | | 12 本 | | | | | | | | | | | | 8 本 | | | | | | 6 本 | | | | | | 4 本 | | | | | |

（単位：ton）

【注意】

1）定格総荷重は水平堅土上において本機の保証できる最大荷重を示しており、フックその他のつり具等の重量を含んだ値です。尚、太枠の内側は、機械の強度によって定められ、下側は機械の安定度によって定められています。

2）定格総荷重はアウトリガの張出し幅とカウンタウエイトの取付け状態により次の様に区分されます。

●ブームの性能区分

| アウトリガ張出し幅 | カウンタウエイト重量 60 ton | 40 ton | 25 ton | 10 ton | 0 ton |
|---|---|---|---|---|---|
| 9.4m | A | B | C | D | E |
| 8.6m | A | C | E | F | F |
| 7.2m | B | C | E | F | F |
| 5.4m | —— | E | F | F | F |

●スーパーラフィングジブの性能区分

| アウトリガ張出し幅 | カウンタウエイト重量 60 ton | 40 ton | 25 ton | 10 ton |
|---|---|---|---|---|
| 9.4m | A | B | C | D |
| 8.6m | A | C | —— | —— |
| 7.2m | B | C | —— | —— |

●ヘビーリフトジブの性能区分

| アウトリガ張出し幅 | カウンタウエイト重量 60 ton | 40 ton | 25 ton |
|---|---|---|---|
| 9.4m | A | B | C |
| 8.6m | A | C | —— |
| 7.2m | B | C | —— |

3）定格総荷重表のブーム角度は、ブームと水平面のなす角度を示し、ジブ角度はブームとジブのなす角度を示します。

4）作業半径は、ブームのたわみを含んだ実際値に基づいていますので必ず作業半径を基準として作業を行ってください。但し、スーパーラフィングジブの作業半径は、40.9m、50mブームにスーパーラフィングジブを装着してジブ作業を行った時の値を示し、これより短いブーム長さでのジブ作業はジブを40.9mブームに取付けたときのブーム角度だけを基準として行ってください。

5）ブーム長さ、ブーム角度、作業半径、ジブ角度が規定の値を越えた場合は、その規定の値と次の規定の値の定格総荷重のうち小さい方の定格総荷重に従って作業を行ってください。

6）定格総荷重表のθはブームの起伏範囲を示し、それ以下にブームを下げると無負荷でもクレーンが転倒したり、機械の破損につながる角度を示します。

7）スーパーラフィングジブを装着したままでブーム作業を行う場合は、定格総荷重よりつり具等の重量の他に16.5tonを差し引いてください。

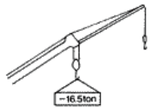


8）ルースターシーブ定格総荷重は、ブーム定格総荷重と等しく、かつ、限度を11.4tonとします。但し、ブームにつり具等が取り付けられている場合には、定格総荷重よりつり具等の重量にブームに取り付けられているつり具等の重量も差し引いてください。

9）ヘビーリフトジブの起伏用ロープは、6本掛にしてください。

10）作業状態別標準フックの種類、掛数、重量を次に示します。

| フックの種類 | 200 ton／150 ton | 65 ton | 22 ton | 11.4 ton |
|---|---|---|---|---|
| フックの重量 | 2550 kg／1850 kg | 1000 kg | 880 kg | 420 kg |

●ブーム

| ブーム長さ | 13.6 m | 18.15 m | 22.7 m | 31.8 m | 40.9 m | 50.0 m |
|---|---|---|---|---|---|---|
| フックの種類 | 200 ton | 150 ton | 150 ton | 150 ton | 65 ton | 65 ton |
| ロープの掛数 | 22 | 12 | 12 | 8 | 6 | 4 |

●ルースタシーブ

| フックの種類 | 11.4 ton |
|---|---|
| ロープの掛数 | 1 |

●スーパーラフィングジブ

| S.Lジブ長さ | 10.5 m | 18.9 m | 27.3 m |
|---|---|---|---|
| フックの種類 | 22 ton | 11.4 ton | 11.4 ton |
| ロープの掛数 | 2 | 1 | 1 |

●ヘビーリフトジブ

| | ブーム長さ | 13.6 m | 18.15 m | 22.7 m | 31.8 m | 40.9 m | 50.0 m |
|---|---|---|---|---|---|---|---|
| ヘビーリフトジブ | 12 m | フックの種類 | 150 ton | 150 ton | 65 ton | 65 ton | —— | —— |
| | | ロープの掛数 | 8 | 8 | 6 | 4 | —— | —— |
| | 21 m | フックの種類 | 65 ton | 65 ton | 65 ton | 65 ton | 22 ton | 22 ton |
| | | ロープの掛数 | 6 | 6 | 4 | 4 | 2 | 2 |
| | 30 m | フックの種類 | 65 ton | 65 ton | 65 ton | 22 ton | 22 ton | 22 ton |
| | | ロープの掛数 | 4 | 4 | 4 | 2 | 2 | 2 |
| | 40 m | フックの種類 | —— | —— | —— | 22 ton | 22 ton | 22 ton |
| | | ロープの掛数 | —— | —— | —— | 2 | 2 | 2 |
| | 47 m | フックの種類 | —— | —— | —— | 22 ton | 22 ton | 22 ton |
| | | ロープの掛数 | —— | —— | —— | 2 | 2 | 2 |
| | 54 m | フックの種類 | —— | —— | —— | —— | 22 ton | 22 ton |
| | | ロープの掛数 | —— | —— | —— | —— | 2 | 2 |

11）定格総荷重表は、風による影響を含んでいません。瞬間風速が10m/secを越える場合は作業を中止してください。

12）定格総荷重量以外の作業を行った場合及び正しい使い方をしなかった時は、転倒又は破損します。この場合は、本機の保証はいたしません。


ojk-inc.com

## スーパーラフィングジブ(SLジブ)

### ■作業半径揚程図

**40.9mブーム+10.5m~27.3mSLジブ**

Ⓐ 40.9mブーム＋10.5mSLジブ(オフセット0°)
Ⓑ 40.9mブーム＋18.9mSLジブ(オフセット0°)
Ⓒ 40.9mブーム＋27.3mSLジブ(オフセット0°)
Ⓓ 40.9mブーム＋10.5mSLジブ(オフセット60°)
Ⓔ 40.9mブーム＋18.9mSLジブ(オフセット60°)
Ⓕ 40.9mブーム＋27.3mSLジブ(オフセット60°)

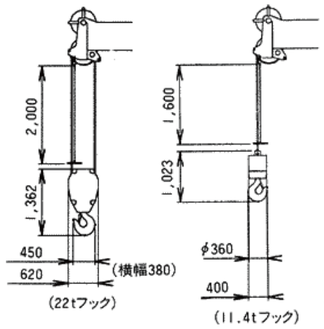


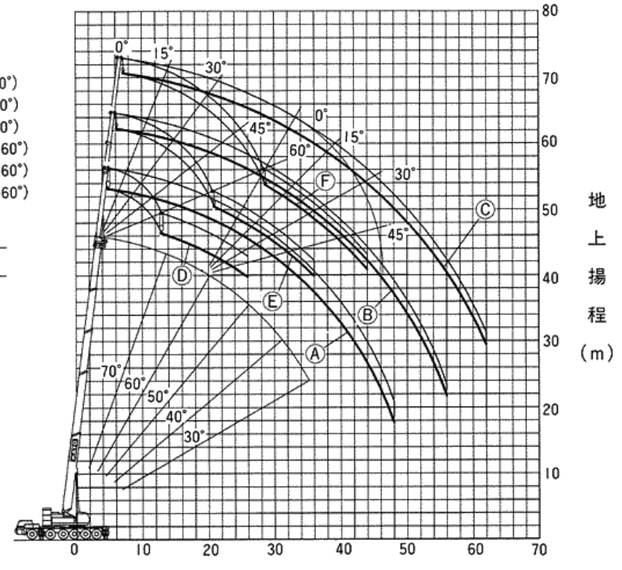


注）本図は、ブーム及びＳＬジブのたわみを含んでいません。

**50mブーム+10.5m~27.3mSLジブ**

Ⓐ 50.0mブーム＋10.5mSLジブ(オフセット0°)
Ⓑ 50.0mブーム＋18.9mSLジブ(オフセット0°)
Ⓒ 50.0mブーム＋27.3mSLジブ(オフセット0°)
Ⓓ 50.0mブーム＋10.5mSLジブ(オフセット60°)
Ⓔ 50.0mブーム＋18.9mSLジブ(オフセット60°)
Ⓕ 50.0mブーム＋27.3mSLジブ(オフセット60°)

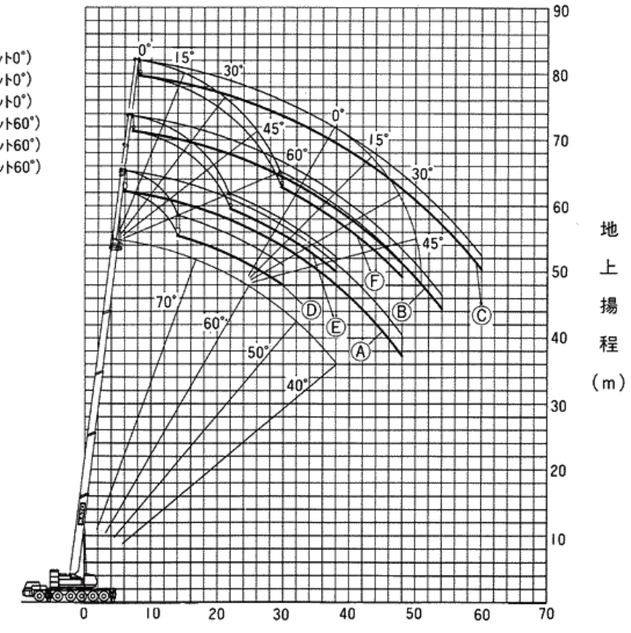


注）本図は、ブーム及びＳＬジブのたわみを含んでいません。

OJK 株式会社OJK［オージェーケー］
OJK All Terrain Crane
KATO KA-2000

## スーパーラフィングジブ(SLジブ)

### ■定格総荷重表

■ A性能

**40.9m・50mブーム+10.5m~27.3mSLジブ**

■40.9mブーム+10.5mSLジブ　A性能

| 作業半径 | 0° | | 15° | | 30° | | 45° | | 60° | |
|---|---|---|---|---|---|---|---|---|---|---|
| (m) | 角度 | 荷重 | 角度 | 荷重 | 角度 | 荷重 | 角度 | 荷重 | 角度 | 荷重 |
| 9.0 | 81.0 | 22.0 | | | | | | | | |
| 10.0 | 78.9 | 22.0 | | | | | | | | |
| 11.0 | 77.8 | 22.0 | | | | | | | | |
| 12.0 | 76.7 | 22.0 | 79.5 | 21.3 | | | | | | |
| 14.0 | 74.5 | 22.0 | 77.1 | 19.7 | 79.5 | 15.8 | | | | |
| 16.0 | 72.3 | 22.0 | 74.9 | 18.4 | 77.2 | 15.0 | 78.8 | 12.4 | | |
| 18.0 | 70.0 | 21.7 | 72.6 | 17.2 | 74.8 | 14.4 | 76.5 | 12.0 | 77.3 | 9.8 |
| 20.0 | 67.7 | 19.4 | 70.3 | 15.9 | 72.5 | 13.8 | 74.1 | 11.7 | 74.8 | 9.6 |
| 22.0 | 65.4 | 17.4 | 67.9 | 14.6 | 70.1 | 12.8 | 71.5 | 11.5 | 72.1 | 9.6 |
| 24.0 | 63.0 | 15.6 | 65.5 | 13.4 | 67.6 | 11.9 | 68.9 | 11.0 | 69.3 | 9.5 |
| 26.0 | 60.5 | 14.0 | 63.0 | 12.4 | 65.0 | 11.2 | 66.1 | 10.4 | 66.3 | 9.5 |
| 28.0 | 58.0 | 12.7 | 60.5 | 11.5 | 62.4 | 10.5 | 63.2 | 9.9 | | |
| 30.0 | 55.3 | 11.5 | 57.9 | 10.7 | 59.7 | 9.8 | 60.2 | 9.4 | | |
| 32.0 | 52.6 | 10.5 | 55.1 | 9.9 | 56.8 | 9.2 | 57.2 | 8.9 | | |
| 34.0 | 49.8 | 9.6 | 52.3 | 9.1 | 53.9 | 8.7 | 54.1 | 8.4 | | |
| 36.0 | 46.9 | 8.7 | 49.3 | 8.4 | 50.7 | 8.1 | 51.0 | 8.0 | | |
| 38.0 | 43.7 | 7.7 | 46.1 | 7.7 | 47.4 | 7.5 | | | | |
| 40.0 | 40.4 | 6.5 | 42.6 | 7.0 | 43.7 | 7.0 | | | | |
| 42.0 | 36.7 | 5.4 | 38.8 | 5.8 | 39.6 | 6.0 | | | | |
| 44.0 | 32.6 | 4.3 | 34.5 | 4.7 | 35.0 | 4.8 | | | | |
| 46.0 | 27.8 | 3.4 | 29.5 | 3.7 | | | | | | |
| 48.0 | 21.9 | 2.5 | 23.1 | 2.6 | | | | | | |
| θ(°) | 17~83 | | 17~83 | | 30~83 | | 45~83 | | 60~83 | |
| 標準フック | 22 ton | | | | | | | | | |
| フック荷重 | 880 kg | | | | | | | | | |
| フック掛数 | 2本 | | | | | | | | | |

(単位：ton)

■50mブーム+10.5mSLジブ　A性能

| 作業半径 | 0° | | 15° | | 30° | | 45° | | 60° | |
|---|---|---|---|---|---|---|---|---|---|---|
| (m) | 角度 | 荷重 | 角度 | 荷重 | 角度 | 荷重 | 角度 | 荷重 | 角度 | 荷重 |
| 11.0 | 80.6 | 17.0 | | | | | | | | |
| 12.0 | 79.7 | 17.0 | | | | | | | | |
| 14.0 | 77.9 | 17.0 | 80.2 | 17.0 | | | | | | |
| 16.0 | 75.9 | 17.0 | 78.3 | 17.0 | 80.0 | 15.3 | | | | |
| 18.0 | 74.0 | 17.0 | 76.4 | 17.0 | 78.0 | 14.7 | 79.6 | 12.3 | 80.1 | 9.8 |
| 20.0 | 72.1 | 16.4 | 74.4 | 15.2 | 76.2 | 13.4 | 77.5 | 12.0 | 78.1 | 9.7 |
| 22.0 | 70.2 | 14.4 | 72.4 | 13.5 | 74.2 | 12.3 | 75.4 | 11.3 | 76.0 | 9.6 |
| 24.0 | 68.2 | 12.6 | 70.4 | 12.0 | 72.2 | 11.2 | 73.2 | 10.4 | 73.9 | 9.5 |
| 26.0 | 66.2 | 11.2 | 68.3 | 10.7 | 70.1 | 10.3 | 71.1 | 9.7 | 71.7 | 9.3 |
| 28.0 | 64.1 | 9.9 | 66.2 | 9.5 | 68.0 | 9.2 | 68.9 | 9.0 | 69.3 | 8.7 |
| 30.0 | 62.0 | 8.9 | 64.0 | 8.5 | 65.8 | 8.3 | 66.6 | 8.2 | 67.0 | 8.1 |
| 32.0 | 59.8 | 7.9 | 61.9 | 7.7 | 63.5 | 7.5 | 64.3 | 7.4 | | |
| 34.0 | 57.6 | 7.0 | 59.6 | 6.9 | 61.2 | 6.8 | 62.0 | 6.7 | | |
| 36.0 | 55.3 | 6.3 | 57.4 | 6.2 | 58.8 | 6.1 | 59.5 | 6.1 | | |
| 38.0 | 53.0 | 5.6 | 55.0 | 5.5 | 56.4 | 5.5 | 57.0 | 5.5 | | |
| 40.0 | 50.6 | 4.9 | 52.6 | 5.0 | 53.8 | 4.9 | 54.3 | 4.9 | | |
| 42.0 | 48.1 | 4.3 | 50.1 | 4.4 | 51.2 | 4.4 | 51.5 | 4.4 | | |
| 44.0 | 45.5 | 3.7 | 47.5 | 3.9 | 48.4 | 4.0 | | | | |
| 46.0 | 42.7 | 3.2 | 44.6 | 3.3 | 45.5 | 3.4 | | | | |
| 48.0 | 39.8 | 2.3 | 41.5 | 2.7 | 42.3 | 2.9 | | | | |
| 50.0 | | | | | 38.9 | 2.0 | | | | |
| θ(°) | 26~83 | | 26~83 | | 30~83 | | 45~83 | | 60~83 | |
| 標準フック | 22 ton | | | | | | | | | |
| フック荷重 | 880 kg | | | | | | | | | |
| フック掛数 | 2本 | | | | | | | | | |

(単位：ton)

■40.9mブーム+18.9mSLジブ　A性能

| 作業半径 | 0° | | 15° | | 30° | | 45° | | 60° | |
|---|---|---|---|---|---|---|---|---|---|---|
| (m) | 角度 | 荷重 | 角度 | 荷重 | 角度 | 荷重 | 角度 | 荷重 | 角度 | 荷重 |
| 10.0 | 81.1 | 10.0 | | | | | | | | |
| 11.0 | 80.1 | 10.0 | | | | | | | | |
| 12.0 | 79.2 | 10.0 | | | | | | | | |
| 14.0 | 77.3 | 10.0 | | | | | | | | |
| 16.0 | 75.4 | 10.0 | 79.4 | 10.0 | | | | | | |
| 18.0 | 73.4 | 10.0 | 77.4 | 10.0 | | | | | | |
| 20.0 | 71.5 | 10.0 | 75.4 | 10.0 | 79.2 | 7.7 | | | | |
| 22.0 | 69.5 | 10.0 | 73.4 | 9.4 | 77.2 | 7.4 | 80.3 | 6.0 | | |
| 24.0 | 67.5 | 10.0 | 71.4 | 8.8 | 75.1 | 7.1 | 78.1 | 5.8 | 80.4 | 4.6 |
| 26.0 | 65.4 | 10.0 | 69.3 | 8.3 | 73.0 | 6.8 | 75.9 | 5.6 | 77.7 | 4.5 |
| 28.0 | 63.3 | 9.4 | 67.2 | 7.8 | 70.9 | 6.5 | 73.5 | 5.5 | 75.0 | 4.4 |
| 30.0 | 61.1 | 8.7 | 65.1 | 7.4 | 68.6 | 6.3 | 71.1 | 5.3 | 72.4 | 4.4 |
| 32.0 | 58.9 | 8.1 | 62.9 | 7.0 | 66.4 | 6.0 | 68.7 | 5.2 | 69.7 | 4.4 |
| 34.0 | 56.7 | 7.5 | 60.7 | 6.7 | 64.1 | 5.8 | 66.2 | 5.1 | 67.0 | 4.3 |
| 36.0 | 54.5 | 7.0 | 58.4 | 6.3 | 61.7 | 5.6 | 63.6 | 5.0 | 64.1 | 4.3 |
| 38.0 | 52.2 | 6.6 | 56.0 | 6.1 | 59.2 | 5.4 | 60.9 | 4.9 | | |
| 40.0 | 49.9 | 6.2 | 53.6 | 5.8 | 56.6 | 5.2 | 57.9 | 4.8 | | |
| 42.0 | 47.4 | 5.8 | 51.1 | 5.4 | 53.9 | 5.0 | 54.8 | 4.7 | | |
| 44.0 | 44.8 | 5.5 | 48.4 | 5.1 | 50.9 | 4.8 | 51.5 | 4.6 | | |
| 46.0 | 42.0 | 5.2 | 45.4 | 4.8 | 47.8 | 4.5 | | | | |
| 48.0 | 38.9 | 4.8 | 42.4 | 4.5 | 44.3 | 4.3 | | | | |
| 50.0 | 35.5 | 3.9 | 38.9 | 4.2 | 40.5 | 4.1 | | | | |
| 52.0 | 31.6 | 3.1 | 35.0 | 3.6 | 36.0 | 3.9 | | | | |
| 54.0 | 27.3 | 2.4 | 30.4 | 2.8 | | | | | | |
| 56.0 | 22.2 | 1.7 | 24.5 | 2.0 | | | | | | |
| θ(°) | 17~83 | | 20~83 | | 30~83 | | 45~83 | | 60~83 | |
| 標準フック | 11.4 ton | | | | | | | | | |
| フック荷重 | 420 kg | | | | | | | | | |
| フック掛数 | 1本 | | | | | | | | | |

(単位：ton)

■50mブーム+18.9mSLジブ　A性能

| 作業半径 | 0° | | 15° | | 30° | | 45° | | 60° | |
|---|---|---|---|---|---|---|---|---|---|---|
| (m) | 角度 | 荷重 | 角度 | 荷重 | 角度 | 荷重 | 角度 | 荷重 | 角度 | 荷重 |
| 12.0 | 81.5 | 9.5 | | | | | | | | |
| 14.0 | 79.8 | 9.5 | | | | | | | | |
| 16.0 | 78.2 | 9.5 | | | | | | | | |
| 18.0 | 76.6 | 9.5 | 80.2 | 9.5 | | | | | | |
| 20.0 | 74.9 | 9.5 | 78.5 | 9.5 | | | | | | |
| 22.0 | 73.2 | 9.5 | 76.9 | 9.5 | 79.9 | 7.7 | | | | |
| 24.0 | 71.6 | 9.5 | 75.1 | 9.4 | 78.1 | 7.4 | 80.6 | 5.9 | | |
| 26.0 | 69.8 | 9.5 | 73.5 | 8.8 | 76.4 | 7.1 | 78.8 | 5.8 | | |
| 28.0 | 68.0 | 9.5 | 71.8 | 8.4 | 74.6 | 6.9 | 76.9 | 5.6 | 78.1 | 4.5 |
| 30.0 | 66.3 | 8.7 | 70.1 | 7.9 | 72.8 | 6.6 | 75.0 | 5.5 | 76.1 | 4.4 |
| 32.0 | 64.5 | 7.8 | 68.2 | 7.3 | 71.0 | 6.4 | 73.1 | 5.4 | 74.0 | 4.4 |
| 34.0 | 62.7 | 7.0 | 66.3 | 6.7 | 69.1 | 6.1 | 71.1 | 5.3 | 71.9 | 4.3 |
| 36.0 | 60.8 | 6.3 | 64.3 | 6.1 | 67.2 | 5.7 | 69.1 | 5.2 | 69.7 | 4.3 |
| 38.0 | 58.9 | 5.7 | 62.3 | 5.6 | 65.3 | 5.3 | 67.0 | 5.0 | 67.5 | 4.3 |
| 40.0 | 57.0 | 5.1 | 60.3 | 5.0 | 63.3 | 4.9 | 64.8 | 4.7 | | |
| 42.0 | 55.0 | 4.6 | 58.2 | 4.6 | 61.3 | 4.5 | 62.5 | 4.4 | | |
| 44.0 | 53.0 | 4.1 | 56.2 | 4.1 | 59.1 | 4.1 | 60.2 | 4.1 | | |
| 46.0 | 50.9 | 3.7 | 54.1 | 3.7 | 56.7 | 3.7 | 57.7 | 3.7 | | |
| 48.0 | 48.7 | 3.3 | 52.0 | 3.3 | 54.2 | 3.4 | 55.1 | 3.4 | | |
| 50.0 | 46.4 | 3.0 | 49.6 | 3.0 | 51.5 | 3.0 | 52.3 | 3.0 | | |
| 52.0 | 43.9 | 2.6 | 47.2 | 2.7 | 48.9 | 2.7 | | | | |
| 54.0 | 41.3 | 2.0 | 44.6 | 2.4 | 46.3 | 2.4 | | | | |
| 56.0 | | | 41.8 | 1.9 | 43.8 | 2.1 | | | | |
| 58.0 | | | | | 40.8 | 1.5 | | | | |
| θ(°) | 26~83 | | 26~83 | | 30~83 | | 45~83 | | 60~83 | |
| 標準フック | 11.4 ton | | | | | | | | | |
| フック荷重 | 420 kg | | | | | | | | | |
| フック掛数 | 1本 | | | | | | | | | |

(単位：ton)

■40.9mブーム+27.3mSLジブ　A性能

| 作業半径 | 0° | | 15° | | 30° | | 45° | | 60° | |
|---|---|---|---|---|---|---|---|---|---|---|
| (m) | 角度 | 荷重 | 角度 | 荷重 | 角度 | 荷重 | 角度 | 荷重 | 角度 | 荷重 |
| 12.0 | 80.2 | 6.5 | | | | | | | | |
| 14.0 | 78.6 | 6.5 | | | | | | | | |
| 16.0 | 77.0 | 6.5 | | | | | | | | |
| 18.0 | 75.4 | 6.5 | | | | | | | | |
| 20.0 | 73.8 | 6.5 | 79.5 | 6.1 | | | | | | |
| 22.0 | 72.1 | 6.5 | 77.8 | 5.7 | | | | | | |
| 24.0 | 70.5 | 6.5 | 76.1 | 5.4 | | | | | | |
| 26.0 | 68.8 | 6.5 | 74.4 | 5.1 | 79.2 | 4.1 | | | | |
| 28.0 | 67.1 | 6.5 | 72.6 | 4.9 | 77.5 | 3.9 | | | | |
| 30.0 | 65.3 | 6.1 | 70.8 | 4.7 | 75.6 | 3.8 | 79.3 | 3.1 | | |
| 32.0 | 63.5 | 5.8 | 69.0 | 4.5 | 73.6 | 3.6 | 77.5 | 3.0 | | |
| 34.0 | 61.6 | 5.4 | 67.1 | 4.3 | 71.6 | 3.5 | 75.5 | 2.9 | 77.9 | 2.5 |
| 36.0 | 59.7 | 5.1 | 65.1 | 4.1 | 69.5 | 3.3 | 73.4 | 2.8 | 75.4 | 2.4 |
| 38.0 | 57.8 | 4.8 | 63.2 | 3.9 | 67.3 | 3.2 | 71.2 | 2.7 | 72.9 | 2.4 |
| 40.0 | 55.9 | 4.4 | 61.2 | 3.8 | 65.1 | 3.1 | 68.8 | 2.7 | 70.3 | 2.3 |
| 42.0 | 53.8 | 4.1 | 59.1 | 3.6 | 62.8 | 3.0 | 66.3 | 2.6 | 67.6 | 2.3 |
| 44.0 | 51.8 | 3.9 | 57.0 | 3.5 | 60.6 | 2.9 | 63.7 | 2.6 | 64.7 | 2.3 |
| 46.0 | 49.7 | 3.6 | 54.9 | 3.3 | 58.2 | 2.8 | 60.9 | 2.5 | | |
| 48.0 | 47.6 | 3.4 | 52.7 | 3.1 | 55.9 | 2.8 | 58.1 | 2.5 | | |
| 50.0 | 45.3 | 3.2 | 50.4 | 3.0 | 53.4 | 2.7 | 55.3 | 2.5 | | |
| 52.0 | 43.0 | 3.0 | 47.9 | 2.9 | 50.8 | 2.6 | 52.4 | 2.5 | | |
| 54.0 | 40.5 | 2.8 | 45.3 | 2.7 | 48.0 | 2.5 | | | | |
| 56.0 | 37.7 | 2.6 | 42.5 | 2.6 | 44.9 | 2.4 | | | | |
| 58.0 | 34.7 | 2.5 | 39.3 | 2.5 | 41.3 | 2.4 | | | | |
| 60.0 | 31.3 | 2.1 | 35.7 | 2.4 | 37.0 | 2.3 | | | | |
| 62.0 | 27.4 | 1.6 | 31.5 | 2.0 | | | | | | |
| 64.0 | | | 26.1 | 1.4 | | | | | | |
| θ(°) | 20~83 | | 20~83 | | 30~83 | | 45~83 | | 60~83 | |
| 標準フック | 11.4 ton | | | | | | | | | |
| フック荷重 | 420 kg | | | | | | | | | |
| フック掛数 | 1本 | | | | | | | | | |

(単位：ton)

■50mブーム+27.3mSLジブ　A性能

| 作業半径 | 0° | | 15° | | 30° | | 45° | | 60° | |
|---|---|---|---|---|---|---|---|---|---|---|
| (m) | 角度 | 荷重 | 角度 | 荷重 | 角度 | 荷重 | 角度 | 荷重 | 角度 | 荷重 |
| 14.0 | 82.0 | 6.0 | | | | | | | | |
| 16.0 | 80.5 | 6.0 | | | | | | | | |
| 18.0 | 79.0 | 6.0 | | | | | | | | |
| 20.0 | 77.5 | 6.0 | | | | | | | | |
| 22.0 | 76.1 | 6.0 | 79.8 | 6.0 | | | | | | |
| 24.0 | 74.5 | 6.0 | 78.4 | 5.7 | | | | | | |
| 26.0 | 73.0 | 6.0 | 77.0 | 5.4 | | | | | | |
| 28.0 | 71.4 | 6.0 | 75.5 | 5.2 | 79.6 | 4.0 | | | | |
| 30.0 | 69.8 | 6.0 | 74.1 | 5.0 | 78.2 | 3.9 | | | | |
| 32.0 | 68.2 | 6.0 | 72.5 | 4.8 | 76.6 | 3.8 | 80.2 | 3.0 | | |
| 34.0 | 66.7 | 6.0 | 71.0 | 4.6 | 75.1 | 3.6 | 78.3 | 3.0 | 80.3 | 2.5 |
| 36.0 | 65.1 | 5.8 | 69.4 | 4.4 | 73.4 | 3.5 | 76.5 | 2.9 | 78.3 | 2.4 |
| 38.0 | 63.5 | 5.5 | 67.8 | 4.2 | 71.7 | 3.4 | 74.6 | 2.8 | 76.3 | 2.4 |
| 40.0 | 61.8 | 5.0 | 66.1 | 4.1 | 70.0 | 3.3 | 72.8 | 2.8 | 74.3 | 2.4 |
| 42.0 | 60.0 | 4.5 | 64.5 | 3.9 | 68.2 | 3.2 | 70.9 | 2.7 | 72.2 | 2.3 |
| 44.0 | 58.3 | 4.1 | 62.8 | 3.8 | 66.4 | 3.1 | 68.9 | 2.7 | 70.0 | 2.3 |
| 46.0 | 56.5 | 3.7 | 61.0 | 3.7 | 64.5 | 3.0 | 66.9 | 2.6 | 67.7 | 2.3 |
| 48.0 | 54.7 | 3.3 | 59.2 | 3.4 | 62.6 | 2.9 | 64.8 | 2.6 | 65.3 | 2.3 |
| 50.0 | 52.7 | 3.0 | 57.4 | 3.0 | 60.7 | 2.8 | 62.7 | 2.5 | | |
| 52.0 | 50.8 | 2.7 | 55.5 | 2.7 | 58.7 | 2.8 | 60.4 | 2.5 | | |
| 54.0 | 48.8 | 2.4 | 53.4 | 2.5 | 56.6 | 2.5 | 58.0 | 2.5 | | |
| 56.0 | 46.8 | 2.1 | 51.2 | 2.2 | 54.3 | 2.3 | 55.5 | 2.3 | | |
| 58.0 | 44.6 | 1.9 | 48.8 | 2.0 | 51.8 | 2.0 | 52.7 | 2.1 | | |
| 60.0 | 42.4 | 1.5 | 46.4 | 1.7 | 49.3 | 1.8 | | | | |
| 62.0 | | | 43.9 | 1.5 | 46.6 | 1.6 | | | | |
| θ(°) | 30~83 | | 30~83 | | 30~83 | | 45~83 | | 60~83 | |
| 標準フック | 11.4 ton | | | | | | | | | |
| フック荷重 | 420 kg | | | | | | | | | |
| フック掛数 | 1本 | | | | | | | | | |

(単位：ton)


ojk-inc.com

## ■ B性能

### 40.9m・50mブーム+10.5m~27.3mSLジブ

■40.9mブーム+10.5mSLジブ　B性能

| 作業半径 | 0° | | 15° | | 30° | | 45° | | 60° | |
|---|---|---|---|---|---|---|---|---|---|---|
| (m) | 角度 | 荷重 | 角度 | 荷重 | 角度 | 荷重 | 角度 | 荷重 | 角度 | 荷重 |
| 9.0 | 81.0 | 22.0 | | | | | | | | |
| 10.0 | 78.9 | 22.0 | | | | | | | | |
| 11.0 | 77.8 | 22.0 | | | | | | | | |
| 12.0 | 76.7 | 22.0 | 79.5 | 21.3 | | | | | | |
| 14.0 | 74.5 | 22.0 | 77.1 | 19.7 | 79.5 | 15.8 | | | | |
| 16.0 | 72.3 | 22.0 | 74.9 | 18.4 | 77.2 | 15.0 | 78.8 | 12.4 | | |
| 18.0 | 70.0 | 21.7 | 72.6 | 17.2 | 74.8 | 14.4 | 76.5 | 12.0 | 77.3 | 9.8 |
| 20.0 | 67.7 | 19.4 | 70.3 | 15.9 | 72.5 | 13.8 | 74.1 | 11.7 | 74.8 | 9.6 |
| 22.0 | 65.4 | 17.4 | 67.9 | 14.6 | 70.1 | 12.8 | 71.5 | 11.5 | 72.1 | 9.6 |
| 24.0 | 63.0 | 15.6 | 65.5 | 13.4 | 67.6 | 11.9 | 68.9 | 11.0 | 69.3 | 9.5 |
| 26.0 | 60.5 | 14.0 | 63.0 | 12.4 | 65.0 | 11.2 | 66.1 | 10.4 | 66.3 | 9.5 |
| 28.0 | 58.0 | 12.7 | 60.5 | 11.5 | 62.4 | 10.5 | 63.2 | 9.9 | | |
| 30.0 | 55.3 | 11.2 | 57.9 | 10.7 | 59.7 | 9.8 | 60.2 | 9.4 | | |
| 32.0 | 52.5 | 9.4 | 55.1 | 9.9 | 56.8 | 9.2 | 57.2 | 8.9 | | |
| 34.0 | 49.6 | 7.8 | 52.2 | 8.6 | 53.9 | 8.7 | 54.1 | 8.4 | | |
| 36.0 | 46.6 | 6.5 | 49.1 | 7.1 | 50.6 | 7.6 | 51.0 | 7.8 | | |
| 38.0 | 43.4 | 5.1 | 45.8 | 5.7 | 47.1 | 6.1 | | | | |
| 40.0 | 40.0 | 3.9 | 42.2 | 4.4 | 43.4 | 4.7 | | | | |
| 42.0 | 36.3 | 2.8 | 38.3 | 3.2 | 39.3 | 3.4 | | | | |
| 44.0 | | | 34.1 | 2.1 | 34.7 | 2.3 | | | | |
| θ(°) | 17~83 | | 17~83 | | 30~83 | | 45~83 | | 60~83 | |
| 標準フック | 22 ton | | | | | | | | | |
| フック荷重 | 880 kg | | | | | | | | | |
| フック掛数 | 2本 | | | | | | | | | |

(単位：ton)

■50mブーム+10.5mSLジブ　B性能

| 作業半径 | 0° | | 15° | | 30° | | 45° | | 60° | |
|---|---|---|---|---|---|---|---|---|---|---|
| (m) | 角度 | 荷重 | 角度 | 荷重 | 角度 | 荷重 | 角度 | 荷重 | 角度 | 荷重 |
| 11.0 | 80.6 | 17.0 | | | | | | | | |
| 12.0 | 79.7 | 17.0 | | | | | | | | |
| 14.0 | 77.9 | 17.0 | 80.2 | 17.0 | | | | | | |
| 16.0 | 75.9 | 17.0 | 78.3 | 17.0 | 80.0 | 15.3 | | | | |
| 18.0 | 74.0 | 17.0 | 76.4 | 17.0 | 78.0 | 14.7 | 79.6 | 12.3 | 80.1 | 9.8 |
| 20.0 | 72.1 | 16.4 | 74.4 | 15.2 | 76.2 | 13.4 | 77.5 | 12.0 | 78.1 | 9.7 |
| 22.0 | 70.2 | 14.4 | 72.4 | 13.5 | 74.2 | 12.3 | 75.4 | 11.3 | 76.0 | 9.6 |
| 24.0 | 68.2 | 12.6 | 70.4 | 12.0 | 72.2 | 11.2 | 73.2 | 10.4 | 73.9 | 9.5 |
| 26.0 | 66.2 | 11.2 | 68.3 | 10.7 | 70.1 | 10.3 | 71.1 | 9.7 | 71.7 | 9.3 |
| 28.0 | 64.1 | 9.9 | 66.2 | 9.5 | 68.0 | 9.2 | 68.9 | 9.0 | 69.3 | 8.7 |
| 30.0 | 62.0 | 8.9 | 64.0 | 8.5 | 65.8 | 8.3 | 66.6 | 8.2 | 67.0 | 8.1 |
| 32.0 | 59.8 | 7.9 | 61.9 | 7.7 | 63.5 | 7.5 | 64.3 | 7.4 | | |
| 34.0 | 57.6 | 7.0 | 59.6 | 6.9 | 61.2 | 6.8 | 62.0 | 6.7 | | |
| 36.0 | 55.3 | 6.3 | 57.4 | 6.2 | 58.8 | 6.1 | 59.5 | 6.1 | | |
| 38.0 | 52.8 | 4.9 | 55.0 | 5.5 | 56.4 | 5.5 | 57.0 | 5.5 | | |
| 40.0 | 50.3 | 3.7 | 52.5 | 4.4 | 53.8 | 4.9 | 54.3 | 4.9 | | |
| 42.0 | 47.7 | 2.6 | 49.7 | 3.2 | 51.0 | 3.6 | 51.3 | 3.8 | | |
| 44.0 | | | 46.8 | 2.1 | 48.1 | 2.5 | | | | |
| θ(°) | 40~83 | | 40~83 | | 40~83 | | 45~83 | | 60~83 | |
| 標準フック | 22 ton | | | | | | | | | |
| フック荷重 | 880 kg | | | | | | | | | |
| フック掛数 | 2本 | | | | | | | | | |

(単位：ton)

■40.9mブーム+18.9mSLジブ　B性能

| 作業半径 | 0° | | 15° | | 30° | | 45° | | 60° | |
|---|---|---|---|---|---|---|---|---|---|---|
| (m) | 角度 | 荷重 | 角度 | 荷重 | 角度 | 荷重 | 角度 | 荷重 | 角度 | 荷重 |
| 10.0 | 81.1 | 10.0 | | | | | | | | |
| 11.0 | 80.1 | 10.0 | | | | | | | | |
| 12.0 | 79.2 | 10.0 | | | | | | | | |
| 14.0 | 77.3 | 10.0 | | | | | | | | |
| 16.0 | 75.4 | 10.0 | 79.4 | 10.0 | | | | | | |
| 18.0 | 73.4 | 10.0 | 77.4 | 10.0 | | | | | | |
| 20.0 | 71.5 | 10.0 | 75.4 | 10.0 | 79.2 | 7.7 | | | | |
| 22.0 | 69.5 | 10.0 | 73.4 | 9.4 | 77.2 | 7.4 | 80.3 | 6.0 | | |
| 24.0 | 67.5 | 10.0 | 71.4 | 8.8 | 75.1 | 7.1 | 78.1 | 5.8 | 80.4 | 4.6 |
| 26.0 | 65.4 | 10.0 | 69.3 | 8.3 | 73.0 | 6.8 | 75.9 | 5.6 | 77.7 | 4.5 |
| 28.0 | 63.3 | 9.4 | 67.2 | 7.8 | 70.9 | 6.5 | 73.5 | 5.5 | 75.0 | 4.4 |
| 30.0 | 61.1 | 8.7 | 65.1 | 7.4 | 68.6 | 6.3 | 71.1 | 5.3 | 72.4 | 4.4 |
| 32.0 | 58.9 | 8.1 | 62.9 | 7.0 | 66.4 | 6.0 | 68.7 | 5.2 | 69.7 | 4.4 |
| 34.0 | 56.7 | 7.5 | 60.7 | 6.7 | 64.1 | 5.8 | 66.2 | 5.1 | 67.0 | 4.3 |
| 36.0 | 54.5 | 7.0 | 58.4 | 6.3 | 61.7 | 5.6 | 63.6 | 5.0 | 64.1 | 4.3 |
| 38.0 | 52.2 | 6.6 | 56.0 | 6.1 | 59.2 | 5.4 | 60.9 | 4.9 | | |
| 40.0 | 49.9 | 6.2 | 53.6 | 5.8 | 56.6 | 5.2 | 57.9 | 4.8 | | |
| 42.0 | 46.7 | 5.2 | 51.1 | 5.4 | 53.9 | 5.0 | 54.8 | 4.7 | | |
| 44.0 | 44.2 | 4.1 | 48.4 | 5.1 | 50.9 | 4.8 | 51.5 | 4.6 | | |
| 46.0 | 41.1 | 3.2 | 45.2 | 4.0 | 47.8 | 4.5 | | | | |
| 48.0 | 37.5 | 2.4 | 41.7 | 3.1 | 44.1 | 3.6 | | | | |
| 50.0 | 33.8 | 1.6 | 37.7 | 2.2 | 39.9 | 2.6 | | | | |
| 52.0 | | | 33.3 | 1.4 | 35.4 | 1.7 | | | | |
| θ(°) | 30~83 | | 30~83 | | 30~83 | | 45~83 | | 60~83 | |
| 標準フック | 11.4 ton | | | | | | | | | |
| フック荷重 | 420 kg | | | | | | | | | |
| フック掛数 | 1本 | | | | | | | | | |

(単位：ton)

■50mブーム+18.9mSLジブ　B性能

| 作業半径 | 0° | | 15° | | 30° | | 45° | | 60° | |
|---|---|---|---|---|---|---|---|---|---|---|
| (m) | 角度 | 荷重 | 角度 | 荷重 | 角度 | 荷重 | 角度 | 荷重 | 角度 | 荷重 |
| 12.0 | 81.5 | 9.5 | | | | | | | | |
| 14.0 | 79.8 | 9.5 | | | | | | | | |
| 16.0 | 78.2 | 9.5 | | | | | | | | |
| 18.0 | 76.6 | 9.5 | 80.2 | 9.5 | | | | | | |
| 20.0 | 74.9 | 9.5 | 78.5 | 9.5 | | | | | | |
| 22.0 | 73.2 | 9.5 | 76.9 | 9.5 | 79.9 | 7.7 | | | | |
| 24.0 | 71.6 | 9.5 | 75.1 | 9.4 | 78.1 | 7.4 | 80.6 | 5.9 | | |
| 26.0 | 69.8 | 9.5 | 73.5 | 8.8 | 76.4 | 7.1 | 78.8 | 5.8 | | |
| 28.0 | 68.0 | 9.5 | 71.8 | 8.4 | 74.6 | 6.9 | 76.9 | 5.6 | 78.1 | 4.5 |
| 30.0 | 66.3 | 8.7 | 70.1 | 7.9 | 72.8 | 6.6 | 75.0 | 5.5 | 76.1 | 4.4 |
| 32.0 | 64.5 | 7.8 | 68.2 | 7.3 | 71.0 | 6.4 | 73.1 | 5.4 | 74.0 | 4.4 |
| 34.0 | 62.7 | 7.0 | 66.3 | 6.7 | 69.1 | 6.1 | 71.1 | 5.3 | 71.9 | 4.3 |
| 36.0 | 60.8 | 6.3 | 64.3 | 6.1 | 67.2 | 5.7 | 69.1 | 5.2 | 69.7 | 4.3 |
| 38.0 | 58.9 | 5.7 | 62.3 | 5.6 | 65.3 | 5.3 | 67.0 | 5.0 | 67.5 | 4.3 |
| 40.0 | 57.0 | 5.1 | 60.3 | 5.0 | 63.3 | 4.9 | 64.8 | 4.7 | | |
| 42.0 | 55.0 | 4.6 | 58.2 | 4.6 | 61.3 | 4.5 | 62.5 | 4.4 | | |
| 44.0 | 52.8 | 3.7 | 56.2 | 4.1 | 59.1 | 4.1 | 60.2 | 4.1 | | |
| 46.0 | 50.5 | 2.8 | 54.1 | 3.7 | 56.7 | 3.7 | 57.7 | 3.7 | | |
| 48.0 | 48.1 | 2.0 | 51.7 | 2.9 | 54.2 | 3.4 | 55.1 | 3.4 | | |
| 50.0 | | | 49.2 | 2.0 | 51.4 | 2.7 | 52.3 | 3.0 | | |
| 52.0 | | | 46.6 | 1.3 | 48.6 | 1.8 | | | | |
| θ(°) | 41~83 | | 41~83 | | 41~83 | | 45~83 | | 60~83 | |
| 標準フック | 11.4 ton | | | | | | | | | |
| フック荷重 | 420 kg | | | | | | | | | |
| フック掛数 | 1本 | | | | | | | | | |

(単位：ton)

■40.9mブーム+27.3mSLジブ　B性能

| 作業半径 | 0° | | 15° | | 30° | | 45° | | 60° | |
|---|---|---|---|---|---|---|---|---|---|---|
| (m) | 角度 | 荷重 | 角度 | 荷重 | 角度 | 荷重 | 角度 | 荷重 | 角度 | 荷重 |
| 12.0 | 80.2 | 6.5 | | | | | | | | |
| 14.0 | 78.6 | 6.5 | | | | | | | | |
| 16.0 | 77.0 | 6.5 | | | | | | | | |
| 18.0 | 75.4 | 6.5 | | | | | | | | |
| 20.0 | 73.8 | 6.5 | 79.5 | 6.1 | | | | | | |
| 22.0 | 72.1 | 6.5 | 77.8 | 5.7 | | | | | | |
| 24.0 | 70.5 | 6.5 | 76.1 | 5.4 | | | | | | |
| 26.0 | 68.8 | 6.5 | 74.4 | 5.1 | 79.2 | 4.1 | | | | |
| 28.0 | 67.1 | 6.5 | 72.6 | 4.9 | 77.5 | 3.9 | | | | |
| 30.0 | 65.3 | 6.1 | 70.8 | 4.7 | 75.6 | 3.8 | 79.3 | 3.1 | | |
| 32.0 | 63.5 | 5.8 | 69.0 | 4.5 | 73.6 | 3.6 | 77.5 | 3.0 | | |
| 34.0 | 61.6 | 5.4 | 67.1 | 4.3 | 71.6 | 3.5 | 75.5 | 2.9 | 77.9 | 2.5 |
| 36.0 | 59.7 | 5.1 | 65.1 | 4.1 | 69.5 | 3.3 | 73.4 | 2.8 | 75.4 | 2.4 |
| 38.0 | 57.8 | 4.8 | 63.2 | 3.9 | 67.3 | 3.2 | 71.2 | 2.7 | 72.9 | 2.4 |
| 40.0 | 55.9 | 4.4 | 61.2 | 3.8 | 65.1 | 3.1 | 68.8 | 2.7 | 70.3 | 2.3 |
| 42.0 | 53.8 | 4.1 | 59.1 | 3.6 | 62.8 | 3.0 | 66.3 | 2.6 | 67.6 | 2.3 |
| 44.0 | 51.8 | 3.9 | 57.0 | 3.5 | 60.6 | 2.9 | 63.7 | 2.6 | 64.7 | 2.3 |
| 46.0 | 49.7 | 3.6 | 54.9 | 3.3 | 58.2 | 2.8 | 60.9 | 2.5 | | |
| 48.0 | 47.6 | 3.4 | 52.7 | 3.1 | 55.9 | 2.8 | 58.1 | 2.5 | | |
| 50.0 | 45.3 | 3.2 | 50.4 | 3.0 | 53.4 | 2.7 | 55.3 | 2.5 | | |
| 52.0 | 42.5 | 2.5 | 47.9 | 2.9 | 50.8 | 2.6 | 52.4 | 2.5 | | |
| 54.0 | 39.5 | 1.9 | 45.3 | 2.7 | 48.0 | 2.5 | | | | |
| 56.0 | | | 42.3 | 2.1 | 44.9 | 2.4 | | | | |
| 58.0 | | | 38.9 | 1.4 | 41.0 | 1.9 | | | | |
| θ(°) | 30~83 | | 30~83 | | 30~83 | | 45~83 | | 60~83 | |
| 標準フック | 11.4 ton | | | | | | | | | |
| フック荷重 | 420 kg | | | | | | | | | |
| フック掛数 | 1本 | | | | | | | | | |

(単位：ton)

■50mブーム+27.3mSLジブ　B性能

| 作業半径 | 0° | | 15° | | 30° | | 45° | | 60° | |
|---|---|---|---|---|---|---|---|---|---|---|
| (m) | 角度 | 荷重 | 角度 | 荷重 | 角度 | 荷重 | 角度 | 荷重 | 角度 | 荷重 |
| 14.0 | 82.0 | 6.0 | | | | | | | | |
| 16.0 | 80.5 | 6.0 | | | | | | | | |
| 18.0 | 79.0 | 6.0 | | | | | | | | |
| 20.0 | 77.5 | 6.0 | | | | | | | | |
| 22.0 | 76.1 | 6.0 | 79.8 | 6.0 | | | | | | |
| 24.0 | 74.5 | 6.0 | 78.4 | 5.7 | | | | | | |
| 26.0 | 73.0 | 6.0 | 77.0 | 5.4 | | | | | | |
| 28.0 | 71.4 | 6.0 | 75.5 | 5.2 | 79.6 | 4.0 | | | | |
| 30.0 | 69.8 | 6.0 | 74.1 | 5.0 | 78.2 | 3.9 | | | | |
| 32.0 | 68.2 | 6.0 | 72.5 | 4.8 | 76.6 | 3.8 | 80.2 | 3.0 | | |
| 34.0 | 66.7 | 6.0 | 71.0 | 4.6 | 75.1 | 3.6 | 78.3 | 3.0 | 80.3 | 2.5 |
| 36.0 | 65.1 | 5.8 | 69.4 | 4.4 | 73.4 | 3.5 | 76.5 | 2.9 | 78.3 | 2.4 |
| 38.0 | 63.5 | 5.5 | 67.8 | 4.2 | 71.7 | 3.4 | 74.6 | 2.8 | 76.3 | 2.4 |
| 40.0 | 61.8 | 5.0 | 66.1 | 4.1 | 70.0 | 3.3 | 72.8 | 2.8 | 74.3 | 2.4 |
| 42.0 | 60.0 | 4.5 | 64.5 | 3.9 | 68.2 | 3.2 | 70.9 | 2.7 | 72.2 | 2.3 |
| 44.0 | 58.3 | 4.1 | 62.8 | 3.8 | 66.4 | 3.1 | 68.9 | 2.7 | 70.0 | 2.3 |
| 46.0 | 56.5 | 3.7 | 61.0 | 3.7 | 64.5 | 3.0 | 66.9 | 2.6 | 67.7 | 2.3 |
| 48.0 | 54.7 | 3.3 | 59.2 | 3.4 | 62.6 | 2.9 | 64.8 | 2.6 | 65.3 | 2.3 |
| 50.0 | 52.6 | 2.7 | 57.4 | 3.0 | 60.7 | 2.8 | 62.7 | 2.5 | | |
| 52.0 | 50.6 | 2.0 | 55.5 | 2.7 | 58.7 | 2.8 | 60.4 | 2.5 | | |
| 54.0 | | | 53.3 | 2.4 | 56.6 | 2.5 | 58.0 | 2.5 | | |
| 56.0 | | | 51.0 | 1.7 | 54.3 | 2.3 | 55.5 | 2.3 | | |
| 58.0 | | | | | 51.7 | 1.8 | 52.7 | 2.1 | | |
| θ(°) | 44~83 | | 45~83 | | 45~83 | | 45~83 | | 60~83 | |
| 標準フック | 11.4 ton | | | | | | | | | |
| フック荷重 | 420 kg | | | | | | | | | |
| フック掛数 | 1本 | | | | | | | | | |

(単位：ton)

## ■ C性能

### 40.9m・50mブーム+10.5m~27.3mSLジブ

■40.9mブーム+10.5mSLジブ　C性能

| 作業半径 | 0° | | 15° | | 30° | | 45° | | 60° | |
|---|---|---|---|---|---|---|---|---|---|---|
| (m) | 角度 | 荷重 | 角度 | 荷重 | 角度 | 荷重 | 角度 | 荷重 | 角度 | 荷重 |
| 9.0 | 81.0 | 22.0 | | | | | | | | |
| 10.0 | 78.9 | 22.0 | | | | | | | | |
| 11.0 | 77.8 | 22.0 | | | | | | | | |
| 12.0 | 76.7 | 22.0 | 79.5 | 21.3 | | | | | | |
| 14.0 | 74.5 | 22.0 | 77.1 | 19.7 | 79.5 | 15.8 | | | | |
| 16.0 | 72.3 | 22.0 | 74.9 | 18.4 | 77.2 | 15.0 | 78.8 | 12.4 | | |
| 18.0 | 70.0 | 21.7 | 72.6 | 17.2 | 74.8 | 14.4 | 76.5 | 12.0 | 77.3 | 9.8 |
| 20.0 | 67.7 | 19.1 | 70.3 | 15.9 | 72.5 | 13.8 | 74.1 | 11.7 | 74.8 | 9.6 |
| 22.0 | 65.3 | 15.7 | 67.9 | 14.6 | 70.1 | 12.8 | 71.5 | 11.5 | 72.1 | 9.6 |
| 24.0 | 62.7 | 12.9 | 65.5 | 13.4 | 67.6 | 11.9 | 68.9 | 11.0 | 69.3 | 9.5 |
| 26.0 | 60.2 | 10.5 | 63.0 | 11.6 | 65.0 | 11.2 | 66.1 | 10.4 | 63.3 | 9.5 |
| 28.0 | 57.5 | 8.4 | 60.3 | 9.4 | 62.3 | 10.3 | 63.2 | 9.9 | | |
| 30.0 | 54.8 | 6.4 | 57.5 | 7.5 | 59.5 | 8.3 | 60.2 | 8.7 | | |
| 32.0 | 52.0 | 4.7 | 54.6 | 5.7 | 56.4 | 6.4 | 57.0 | 6.8 | | |
| 34.0 | 49.1 | 3.3 | 51.6 | 4.1 | 53.2 | 4.7 | 53.7 | 5.0 | | |
| 36.0 | 46.0 | 2.0 | 48.3 | 2.7 | 49.9 | 3.2 | 50.4 | 3.4 | | |
| 38.0 | | | | | 46.4 | 1.9 | | | | |
| θ(°) | 41~83 | | 42~83 | | 42~83 | | 45~83 | | 60~83 | |
| 標準フック | 22 ton | | | | | | | | | |
| フック荷重 | 880 kg | | | | | | | | | |
| フック掛数 | 2本 | | | | | | | | | |

(単位：ton)

■50mブーム+10.5mSLジブ　C性能

| 作業半径 | 0° | | 15° | | 30° | | 45° | | 60° | |
|---|---|---|---|---|---|---|---|---|---|---|
| (m) | 角度 | 荷重 | 角度 | 荷重 | 角度 | 荷重 | 角度 | 荷重 | 角度 | 荷重 |
| 11.0 | 80.6 | 17.0 | | | | | | | | |
| 12.0 | 79.7 | 17.0 | | | | | | | | |
| 14.0 | 77.9 | 17.0 | 80.2 | 17.0 | | | | | | |
| 16.0 | 75.9 | 17.0 | 78.3 | 17.0 | 80.0 | 15.3 | | | | |
| 18.0 | 74.0 | 17.0 | 76.4 | 17.0 | 78.0 | 14.7 | 79.6 | 12.3 | 80.1 | 9.8 |
| 20.0 | 72.1 | 16.4 | 74.4 | 15.2 | 76.2 | 13.4 | 77.5 | 12.0 | 78.1 | 9.7 |
| 22.0 | 70.2 | 14.4 | 72.4 | 13.5 | 74.2 | 12.3 | 75.4 | 11.3 | 76.0 | 9.6 |
| 24.0 | 68.2 | 12.6 | 70.4 | 12.0 | 72.2 | 11.2 | 73.2 | 10.4 | 73.9 | 9.5 |
| 26.0 | 66.1 | 10.4 | 68.3 | 10.7 | 70.1 | 10.3 | 71.1 | 9.7 | 71.7 | 9.3 |
| 28.0 | 63.9 | 8.2 | 66.2 | 9.4 | 68.0 | 9.2 | 68.9 | 9.0 | 69.3 | 8.7 |
| 30.0 | 61.6 | 6.3 | 63.8 | 7.4 | 65.8 | 8.3 | 66.6 | 8.2 | 67.0 | 8.1 |
| 32.0 | 59.3 | 4.6 | 61.5 | 5.6 | 63.4 | 6.4 | 64.3 | 7.0 | | |
| 34.0 | 56.9 | 3.1 | 58.9 | 4.0 | 60.9 | 4.8 | 61.7 | 5.3 | | |
| 36.0 | | | 56.4 | 2.7 | 58.5 | 3.3 | 59.0 | 3.7 | | |
| 38.0 | | | | | | | 56.3 | 2.4 | | |
| θ(°) | 52~83 | | 52~83 | | 52~83 | | 52~83 | | 60~83 | |
| 標準フック | 22 ton | | | | | | | | | |
| フック荷重 | 880 kg | | | | | | | | | |
| フック掛数 | 2本 | | | | | | | | | |

(単位：ton)

■40.9mブーム+18.9mSLジブ　C性能

| 作業半径 | 0° | | 15° | | 30° | | 45° | | 60° | |
|---|---|---|---|---|---|---|---|---|---|---|
| (m) | 角度 | 荷重 | 角度 | 荷重 | 角度 | 荷重 | 角度 | 荷重 | 角度 | 荷重 |
| 10.0 | 81.1 | 10.0 | | | | | | | | |
| 11.0 | 80.1 | 10.0 | | | | | | | | |
| 12.0 | 79.2 | 10.0 | | | | | | | | |
| 14.0 | 77.3 | 10.0 | | | | | | | | |
| 16.0 | 75.4 | 10.0 | 79.4 | 10.0 | | | | | | |
| 18.0 | 73.4 | 10.0 | 77.4 | 10.0 | | | | | | |
| 20.0 | 71.5 | 10.0 | 75.4 | 10.0 | 79.2 | 7.7 | | | | |
| 22.0 | 69.5 | 10.0 | 73.4 | 9.4 | 77.2 | 7.4 | 80.3 | 6.0 | | |
| 24.0 | 67.5 | 10.0 | 71.4 | 8.8 | 75.1 | 7.1 | 78.1 | 5.8 | 80.4 | 4.6 |
| 26.0 | 65.4 | 10.0 | 69.3 | 8.3 | 73.0 | 6.8 | 75.9 | 5.6 | 77.7 | 4.5 |
| 28.0 | 63.3 | 9.4 | 67.2 | 7.8 | 70.9 | 6.5 | 73.5 | 5.5 | 75.0 | 4.4 |
| 30.0 | 61.1 | 8.7 | 65.1 | 7.4 | 68.6 | 6.3 | 71.1 | 5.3 | 72.4 | 4.4 |
| 32.0 | 58.8 | 7.3 | 62.9 | 7.0 | 66.4 | 6.0 | 68.7 | 5.2 | 69.7 | 4.4 |
| 34.0 | 56.5 | 5.8 | 60.7 | 6.7 | 64.1 | 5.8 | 66.2 | 5.1 | 67.0 | 4.3 |
| 36.0 | 54.1 | 4.5 | 58.3 | 5.9 | 61.7 | 5.6 | 63.6 | 5.0 | 64.1 | 4.3 |
| 38.0 | 51.5 | 3.3 | 55.9 | 4.6 | 59.2 | 5.4 | 60.9 | 4.9 | | |
| 40.0 | 48.8 | 2.3 | 53.2 | 3.4 | 56.4 | 4.4 | 57.9 | 4.8 | | |
| 42.0 | 45.9 | 1.4 | 50.4 | 2.4 | 53.5 | 3.2 | 54.6 | 3.7 | | |
| 44.0 | | | | | 50.3 | 2.2 | 51.2 | 2.5 | | |
| θ(°) | 43~83 | | 45~83 | | 45~83 | | 45~83 | | 60~83 | |
| 標準フック | 11.4 ton | | | | | | | | | |
| フック荷重 | 420 kg | | | | | | | | | |
| フック掛数 | 1本 | | | | | | | | | |

(単位：ton)

■50mブーム+18.9mSLジブ　C性能

| 作業半径 | 0° | | 15° | | 30° | | 45° | | 60° | |
|---|---|---|---|---|---|---|---|---|---|---|
| (m) | 角度 | 荷重 | 角度 | 荷重 | 角度 | 荷重 | 角度 | 荷重 | 角度 | 荷重 |
| 12.0 | 81.5 | 9.5 | | | | | | | | |
| 14.0 | 79.8 | 9.5 | | | | | | | | |
| 16.0 | 78.2 | 9.5 | | | | | | | | |
| 18.0 | 76.6 | 9.5 | 80.2 | 9.5 | | | | | | |
| 20.0 | 74.9 | 9.5 | 78.5 | 9.5 | | | | | | |
| 22.0 | 73.2 | 9.5 | 76.9 | 9.5 | 79.9 | 7.7 | | | | |
| 24.0 | 71.6 | 9.5 | 75.1 | 9.4 | 78.1 | 7.4 | 80.6 | 5.9 | | |
| 26.0 | 69.8 | 9.5 | 73.5 | 8.8 | 76.4 | 7.1 | 78.8 | 5.8 | | |
| 28.0 | 68.0 | 9.5 | 71.8 | 8.4 | 74.6 | 6.9 | 76.9 | 5.6 | 78.1 | 4.5 |
| 30.0 | 66.3 | 8.5 | 70.1 | 7.9 | 72.8 | 6.6 | 75.0 | 5.5 | 76.1 | 4.4 |
| 32.0 | 64.3 | 6.9 | 68.2 | 7.3 | 71.0 | 6.4 | 73.1 | 5.4 | 74.0 | 4.4 |
| 34.0 | 62.3 | 5.4 | 66.3 | 6.7 | 69.1 | 6.1 | 71.1 | 5.3 | 71.9 | 4.3 |
| 36.0 | 60.2 | 4.1 | 64.2 | 5.6 | 67.2 | 5.7 | 69.1 | 5.2 | 69.7 | 4.3 |
| 38.0 | | | 62.0 | 4.3 | 65.3 | 5.3 | 67.0 | 5.0 | 67.5 | 4.3 |
| 40.0 | | | 59.8 | 3.2 | 63.1 | 4.3 | 64.8 | 4.7 | | |
| 42.0 | | | | | 60.8 | 3.2 | 62.4 | 3.8 | | |
| 44.0 | | | | | 58.3 | 2.1 | 59.8 | 2.7 | | |
| θ(°) | 54~83 | | 54~83 | | 54~83 | | 55~83 | | 60~83 | |
| 標準フック | 11.4 ton | | | | | | | | | |
| フック荷重 | 420 kg | | | | | | | | | |
| フック掛数 | 1本 | | | | | | | | | |

(単位：ton)

■40.9mブーム+27.3mSLジブ　C性能

| 作業半径 | 0° | | 15° | | 30° | | 45° | | 60° | |
|---|---|---|---|---|---|---|---|---|---|---|
| (m) | 角度 | 荷重 | 角度 | 荷重 | 角度 | 荷重 | 角度 | 荷重 | 角度 | 荷重 |
| 12.0 | 80.2 | 6.5 | | | | | | | | |
| 14.0 | 78.6 | 6.5 | | | | | | | | |
| 16.0 | 77.0 | 6.5 | | | | | | | | |
| 18.0 | 75.4 | 6.5 | | | | | | | | |
| 20.0 | 73.8 | 6.5 | 79.5 | 6.1 | | | | | | |
| 22.0 | 72.1 | 6.5 | 77.8 | 5.7 | | | | | | |
| 24.0 | 70.5 | 6.5 | 76.1 | 5.4 | | | | | | |
| 26.0 | 68.8 | 6.5 | 74.4 | 5.1 | 79.2 | 4.1 | | | | |
| 28.0 | 67.1 | 6.5 | 72.6 | 4.9 | 77.5 | 3.9 | | | | |
| 30.0 | 65.3 | 6.1 | 70.8 | 4.7 | 75.6 | 3.8 | 79.3 | 3.1 | | |
| 32.0 | 63.5 | 5.8 | 69.0 | 4.5 | 73.6 | 3.6 | 77.5 | 3.0 | | |
| 34.0 | 61.6 | 5.4 | 67.1 | 4.3 | 71.6 | 3.5 | 75.5 | 2.9 | 77.9 | 2.5 |
| 36.0 | 59.7 | 5.1 | 65.1 | 4.1 | 69.5 | 3.3 | 73.4 | 2.8 | 75.4 | 2.4 |
| 38.0 | 57.8 | 4.8 | 63.2 | 3.9 | 67.3 | 3.2 | 71.2 | 2.7 | 72.9 | 2.4 |
| 40.0 | 55.8 | 4.0 | 61.2 | 3.8 | 65.1 | 3.1 | 68.8 | 2.7 | 70.3 | 2.3 |
| 42.0 | 53.6 | 3.0 | 59.1 | 3.6 | 62.8 | 3.0 | 66.3 | 2.6 | 67.6 | 2.3 |
| 44.0 | 51.3 | 2.2 | 57.0 | 3.5 | 60.6 | 2.9 | 63.7 | 2.6 | 64.7 | 2.3 |
| 46.0 | 48.9 | 1.4 | 54.7 | 2.7 | 58.2 | 2.8 | 60.9 | 2.5 | | |
| 48.0 | | | 52.2 | 1.9 | 55.9 | 2.8 | 58.1 | 2.5 | | |
| 50.0 | | | | | 53.3 | 2.1 | 55.3 | 2.5 | | |
| 52.0 | | | | | | | 52.2 | 1.8 | | |
| θ(°) | 44~83 | | 47~83 | | 48~83 | | 48~83 | | 60~83 | |
| 標準フック | 11.4 ton | | | | | | | | | |
| フック荷重 | 420 kg | | | | | | | | | |
| フック掛数 | 1本 | | | | | | | | | |

(単位：ton)

■50mブーム+27.3mSLジブ　C性能

| 作業半径 | 0° | | 15° | | 30° | | 45° | | 60° | |
|---|---|---|---|---|---|---|---|---|---|---|
| (m) | 角度 | 荷重 | 角度 | 荷重 | 角度 | 荷重 | 角度 | 荷重 | 角度 | 荷重 |
| 14.0 | 82.0 | 6.0 | | | | | | | | |
| 16.0 | 80.5 | 6.0 | | | | | | | | |
| 18.0 | 79.0 | 6.0 | | | | | | | | |
| 20.0 | 77.5 | 6.0 | | | | | | | | |
| 22.0 | 76.1 | 6.0 | 79.8 | 6.0 | | | | | | |
| 24.0 | 74.5 | 6.0 | 78.4 | 5.7 | | | | | | |
| 26.0 | 73.0 | 6.0 | 77.0 | 5.4 | | | | | | |
| 28.0 | 71.4 | 6.0 | 75.5 | 5.2 | 79.6 | 4.0 | | | | |
| 30.0 | 69.8 | 6.0 | 74.1 | 5.0 | 78.2 | 3.9 | | | | |
| 32.0 | 68.2 | 6.0 | 72.5 | 4.8 | 76.6 | 3.8 | 80.2 | 3.0 | | |
| 34.0 | 66.7 | 6.0 | 71.0 | 4.6 | 75.1 | 3.6 | 78.3 | 3.0 | 80.3 | 2.5 |
| 36.0 | 65.0 | 5.6 | 69.4 | 4.4 | 73.4 | 3.5 | 76.5 | 2.9 | 78.3 | 2.4 |
| 38.0 | 63.1 | 4.4 | 67.8 | 4.2 | 71.7 | 3.4 | 74.6 | 2.8 | 76.3 | 2.4 |
| 40.0 | 61.2 | 3.4 | 66.1 | 4.1 | 70.0 | 3.3 | 72.8 | 2.8 | 74.3 | 2.4 |
| 42.0 | 59.2 | 2.4 | 64.5 | 3.9 | 68.2 | 3.2 | 70.9 | 2.7 | 72.2 | 2.3 |
| 44.0 | | | 62.5 | 3.2 | 66.4 | 3.1 | 68.9 | 2.7 | 70.0 | 2.3 |
| 46.0 | | | 60.3 | 2.3 | 64.5 | 3.0 | 66.9 | 2.6 | 67.7 | 2.3 |
| 48.0 | | | | | 62.6 | 2.8 | 64.8 | 2.6 | 65.3 | 2.3 |
| 50.0 | | | | | 60.3 | 1.9 | 62.7 | 2.5 | | |
| 52.0 | | | | | | | 60.1 | 1.9 | | |
| θ(°) | 54~83 | | 55~83 | | 55~83 | | 55~83 | | 60~83 | |
| 標準フック | 11.4 ton | | | | | | | | | |
| フック荷重 | 420 kg | | | | | | | | | |
| フック掛数 | 1本 | | | | | | | | | |

(単位：ton)


ojk-inc.com

## ■ D性能

### 40.9m・50mブーム+10.5m～27.3mSLジブ

■40.9mブーム+10.5mSLジブ　D性能

| 作業半径 | 0° | | 15° | | 30° | | 45° | | 60° | |
|---|---|---|---|---|---|---|---|---|---|---|
| (m) | 角度 | 荷重 | 角度 | 荷重 | 角度 | 荷重 | 角度 | 荷重 | 角度 | 荷重 |
| 9.0 | 81.0 | 22.0 | | | | | | | | |
| 10.0 | 78.9 | 22.0 | | | | | | | | |
| 11.0 | 77.8 | 22.0 | | | | | | | | |
| 12.0 | 76.7 | 22.0 | 79.5 | 21.3 | | | | | | |
| 14.0 | 74.5 | 22.0 | 77.1 | 19.7 | 79.5 | 15.8 | | | | |
| 16.0 | 72.3 | 22.0 | 74.9 | 18.4 | 77.2 | 15.0 | 78.8 | 12.4 | | |
| 18.0 | 69.8 | 19.0 | 72.6 | 17.2 | 74.8 | 14.4 | 76.5 | 12.0 | 77.3 | 9.8 |
| 20.0 | 67.4 | 14.9 | 70.3 | 15.9 | 72.5 | 13.8 | 74.1 | 11.7 | 74.8 | 9.6 |
| 22.0 | 64.9 | 11.7 | 67.8 | 13.1 | 70.1 | 12.8 | 71.5 | 11.5 | 72.1 | 9.6 |
| 24.0 | 62.2 | 8.9 | 65.2 | 10.3 | 67.5 | 11.4 | 68.9 | 11.0 | 69.3 | 9.5 |
| 26.0 | 59.7 | 6.4 | 62.6 | 7.9 | 64.7 | 8.9 | 66.0 | 9.6 | 66.3 | 9.5 |
| 28.0 | 57.1 | 4.4 | 59.8 | 5.6 | 61.9 | 6.6 | 63.0 | 7.3 | | |
| 30.0 | 54.3 | 2.6 | 57.0 | 3.7 | 58.9 | 4.6 | 59.9 | 5.2 | | |
| 32.0 | | | | | 55.9 | 2.9 | 56.7 | 3.3 | | |
| θ(°) | 51～83 | | 52～83 | | 52～83 | | 53～83 | | 60～83 | |
| 標準フック | 22 ton | | | | | | | | | |
| フック荷重 | 880 kg | | | | | | | | | |
| フック掛数 | 2本 | | | | | | | | | |

(単位：ton)

■50mブーム+10.5mSLジブ　D性能

| 作業半径 | 0° | | 15° | | 30° | | 45° | | 60° | |
|---|---|---|---|---|---|---|---|---|---|---|
| (m) | 角度 | 荷重 | 角度 | 荷重 | 角度 | 荷重 | 角度 | 荷重 | 角度 | 荷重 |
| 11.0 | 80.6 | 17.0 | | | | | | | | |
| 12.0 | 79.7 | 17.0 | | | | | | | | |
| 14.0 | 77.9 | 17.0 | 80.2 | 17.0 | | | | | | |
| 16.0 | 75.9 | 17.0 | 78.3 | 17.0 | 80.0 | 15.3 | | | | |
| 18.0 | 74.0 | 17.0 | 76.4 | 17.0 | 78.0 | 14.7 | 79.6 | 12.3 | 80.1 | 9.8 |
| 20.0 | 71.9 | 14.4 | 74.4 | 15.2 | 76.2 | 13.4 | 77.5 | 12.0 | 78.1 | 9.7 |
| 22.0 | 69.8 | 11.2 | 72.3 | 12.9 | 74.2 | 12.3 | 75.4 | 11.3 | 76.0 | 9.6 |
| 24.0 | 67.7 | 8.7 | 70.1 | 10.2 | 72.2 | 11.2 | 73.2 | 10.4 | 73.9 | 9.5 |
| 26.0 | | | 67.9 | 7.8 | 70.0 | 8.9 | 71.1 | 9.7 | 71.7 | 9.3 |
| 28.0 | | | | | 67.6 | 6.7 | 68.6 | 7.5 | 69.2 | 7.8 |
| 30.0 | | | | | | | | | 66.6 | 5.7 |
| θ(°) | 63～83 | | 63～83 | | 63～83 | | 63～83 | | 63～83 | |
| 標準フック | 22 ton | | | | | | | | | |
| フック荷重 | 880 kg | | | | | | | | | |
| フック掛数 | 2本 | | | | | | | | | |

(単位：ton)

■40.9mブーム+18.9mSLジブ　D性能

| 作業半径 | 0° | | 15° | | 30° | | 45° | | 60° | |
|---|---|---|---|---|---|---|---|---|---|---|
| (m) | 角度 | 荷重 | 角度 | 荷重 | 角度 | 荷重 | 角度 | 荷重 | 角度 | 荷重 |
| 10.0 | 81.1 | 10.0 | | | | | | | | |
| 11.0 | 80.1 | 10.0 | | | | | | | | |
| 12.0 | 79.2 | 10.0 | | | | | | | | |
| 14.0 | 77.3 | 10.0 | | | | | | | | |
| 16.0 | 75.4 | 10.0 | 79.4 | 10.0 | | | | | | |
| 18.0 | 73.4 | 10.0 | 77.4 | 10.0 | | | | | | |
| 20.0 | 71.5 | 10.0 | 75.4 | 10.0 | 79.2 | 7.7 | | | | |
| 22.0 | 69.5 | 10.0 | 73.4 | 9.4 | 77.2 | 7.4 | 80.3 | 6.0 | | |
| 24.0 | 67.5 | 10.0 | 71.4 | 8.8 | 75.1 | 7.1 | 78.1 | 5.8 | 80.4 | 4.6 |
| 26.0 | 65.3 | 9.1 | 69.3 | 8.3 | 73.0 | 6.8 | 75.9 | 5.6 | 77.7 | 4.5 |
| 28.0 | 63.1 | 7.1 | 67.2 | 7.8 | 70.9 | 6.5 | 73.5 | 5.5 | 75.0 | 4.4 |
| 30.0 | 60.8 | 5.4 | 65.1 | 7.3 | 68.6 | 6.3 | 71.1 | 5.3 | 72.4 | 4.4 |
| 32.0 | 58.5 | 3.8 | 62.8 | 5.6 | 66.4 | 6.0 | 68.7 | 5.2 | 69.7 | 4.4 |
| 34.0 | 56.2 | 2.5 | 60.5 | 4.1 | 64.0 | 5.5 | 66.2 | 5.1 | 67.0 | 4.3 |
| 36.0 | | | 58.2 | 2.8 | 61.5 | 4.1 | 63.6 | 5.0 | 64.1 | 4.3 |
| 38.0 | | | | | 59.0 | 2.8 | 60.5 | 3.5 | | |
| 40.0 | | | | | | | 57.4 | 2.2 | | |
| θ(°) | 52～83 | | 54～83 | | 54～83 | | 54～83 | | 60～83 | |
| 標準フック | 11.4 ton | | | | | | | | | |
| フック荷重 | 420 kg | | | | | | | | | |
| フック掛数 | 1本 | | | | | | | | | |

(単位：ton)

■50mブーム+18.9mSLジブ　D性能

| 作業半径 | 0° | | 15° | | 30° | | 45° | | 60° | |
|---|---|---|---|---|---|---|---|---|---|---|
| (m) | 角度 | 荷重 | 角度 | 荷重 | 角度 | 荷重 | 角度 | 荷重 | 角度 | 荷重 |
| 12.0 | 81.5 | 9.5 | | | | | | | | |
| 14.0 | 79.8 | 9.5 | | | | | | | | |
| 16.0 | 78.2 | 9.5 | | | | | | | | |
| 18.0 | 76.6 | 9.5 | 80.2 | 9.5 | | | | | | |
| 20.0 | 74.9 | 9.5 | 78.5 | 9.5 | | | | | | |
| 22.0 | 73.2 | 9.5 | 76.9 | 9.5 | 79.9 | 7.7 | | | | |
| 24.0 | 71.6 | 9.5 | 75.1 | 9.4 | 78.1 | 7.4 | 80.6 | 5.9 | | |
| 26.0 | 69.6 | 8.6 | 73.5 | 8.8 | 76.4 | 7.1 | 78.8 | 5.8 | | |
| 28.0 | 67.5 | 6.7 | 71.8 | 8.4 | 74.6 | 6.9 | 76.9 | 5.6 | 78.1 | 4.5 |
| 30.0 | | | 69.9 | 7.0 | 72.8 | 6.6 | 75.0 | 5.5 | 76.1 | 4.4 |
| 32.0 | | | 67.7 | 5.3 | 71.0 | 6.4 | 73.1 | 5.4 | 74.0 | 4.4 |
| 34.0 | | | | | 69.0 | 5.4 | 71.1 | 5.3 | 71.9 | 4.3 |
| 36.0 | | | | | | | 69.0 | 5.0 | 69.7 | 4.3 |
| θ(°) | 63～83 | | 63～83 | | 63～83 | | 64～83 | | 64～83 | |
| 標準フック | 11.4 ton | | | | | | | | | |
| フック荷重 | 420 kg | | | | | | | | | |
| フック掛数 | 1本 | | | | | | | | | |

(単位：ton)

■40.9mブーム+27.3mSLジブ　D性能

| 作業半径 | 0° | | 15° | | 30° | | 45° | | 60° | |
|---|---|---|---|---|---|---|---|---|---|---|
| (m) | 角度 | 荷重 | 角度 | 荷重 | 角度 | 荷重 | 角度 | 荷重 | 角度 | 荷重 |
| 12.0 | 80.2 | 6.5 | | | | | | | | |
| 14.0 | 78.6 | 6.5 | | | | | | | | |
| 16.0 | 77.0 | 6.5 | | | | | | | | |
| 18.0 | 75.4 | 6.5 | | | | | | | | |
| 20.0 | 73.8 | 6.5 | 79.5 | 6.1 | | | | | | |
| 22.0 | 72.1 | 6.5 | 77.8 | 5.7 | | | | | | |
| 24.0 | 70.5 | 6.5 | 76.1 | 5.4 | | | | | | |
| 26.0 | 68.8 | 6.5 | 74.4 | 5.1 | 79.2 | 4.1 | | | | |
| 28.0 | 67.1 | 6.5 | 72.6 | 4.9 | 77.5 | 3.9 | | | | |
| 30.0 | 65.3 | 6.1 | 70.8 | 4.7 | 75.6 | 3.8 | 79.3 | 3.1 | | |
| 32.0 | 63.4 | 5.6 | 69.0 | 4.5 | 73.6 | 3.6 | 77.5 | 3.0 | | |
| 34.0 | 61.4 | 4.3 | 67.1 | 4.3 | 71.6 | 3.5 | 75.5 | 2.9 | 77.9 | 2.5 |
| 36.0 | 59.3 | 3.1 | 65.1 | 4.1 | 69.5 | 3.3 | 73.4 | 2.8 | 75.4 | 2.4 |
| 38.0 | | | 63.2 | 3.9 | 67.3 | 3.2 | 71.2 | 2.7 | 72.9 | 2.4 |
| 40.0 | | | 60.9 | 2.9 | 65.1 | 3.1 | 68.8 | 2.7 | 70.3 | 2.3 |
| 42.0 | | | 58.6 | 2.0 | 62.8 | 3.0 | 66.3 | 2.6 | 67.6 | 2.3 |
| 44.0 | | | | | 60.5 | 2.4 | 63.7 | 2.6 | 64.7 | 2.3 |
| 46.0 | | | | | 58.1 | 1.5 | 60.8 | 2.4 | | |
| 48.0 | | | | | | | 58.0 | 1.4 | | |
| θ(°) | 54～83 | | 54～83 | | 54～83 | | 55～83 | | 60～83 | |
| 標準フック | 11.4 ton | | | | | | | | | |
| フック荷重 | 420 kg | | | | | | | | | |
| フック掛数 | 1本 | | | | | | | | | |

(単位：ton)

■50mブーム+27.3mSLジブ　D性能

| 作業半径 | 0° | | 15° | | 30° | | 45° | | 60° | |
|---|---|---|---|---|---|---|---|---|---|---|
| (m) | 角度 | 荷重 | 角度 | 荷重 | 角度 | 荷重 | 角度 | 荷重 | 角度 | 荷重 |
| 14.0 | 82.0 | 6.0 | | | | | | | | |
| 16.0 | 80.5 | 6.0 | | | | | | | | |
| 18.0 | 79.0 | 6.0 | | | | | | | | |
| 20.0 | 77.5 | 6.0 | | | | | | | | |
| 22.0 | 76.1 | 6.0 | 79.8 | 6.0 | | | | | | |
| 24.0 | 74.5 | 6.0 | 78.4 | 5.7 | | | | | | |
| 26.0 | 73.0 | 6.0 | 77.0 | 5.4 | | | | | | |
| 28.0 | 71.4 | 6.0 | 75.5 | 5.2 | 79.6 | 4.0 | | | | |
| 30.0 | 69.8 | 6.0 | 74.1 | 5.0 | 78.2 | 3.9 | | | | |
| 32.0 | | | 72.5 | 4.8 | 76.6 | 3.8 | 80.2 | 3.0 | | |
| 34.0 | | | 71.0 | 4.6 | 75.1 | 3.6 | 78.3 | 3.0 | 80.3 | 2.5 |
| 36.0 | | | 69.4 | 4.4 | 73.4 | 3.5 | 76.5 | 2.9 | 78.3 | 2.4 |
| 38.0 | | | | | 71.7 | 3.4 | 74.6 | 2.8 | 76.3 | 2.4 |
| 40.0 | | | | | 70.0 | 3.3 | 72.8 | 2.8 | 74.3 | 2.4 |
| 42.0 | | | | | | | 70.9 | 2.7 | 72.2 | 2.3 |
| 44.0 | | | | | | | 68.9 | 2.7 | 70.0 | 2.3 |
| 46.0 | | | | | | | | | 67.7 | 2.3 |
| θ(°) | 64～83 | | 64～83 | | 64～83 | | 64～83 | | 64～83 | |
| 標準フック | 11.4 ton | | | | | | | | | |
| フック荷重 | 420 kg | | | | | | | | | |
| フック掛数 | 1本 | | | | | | | | | |

(単位：ton)

## ヘビーリフトジブ

### ■作業半径揚程図

**13.6m～50mブーム+12m・21m・30m・40m・47m・54mヘビーリフトジブ**

Ⓐ 13.6mブーム＋12mヘビーリフトジブ（オフセット10°）
Ⓑ 13.6mブーム＋21mヘビーリフトジブ（オフセット10°）
Ⓒ 13.6mブーム＋30mヘビーリフトジブ（オフセット10°）
Ⓓ 13.6mブーム＋12mヘビーリフトジブ（オフセット60°）
Ⓔ 13.6mブーム＋21mヘビーリフトジブ（オフセット60°）
Ⓕ 13.6mブーム＋30mヘビーリフトジブ（オフセット60°）
Ⓖ 50.0mブーム＋21mヘビーリフトジブ（オフセット10°）
Ⓗ 50.0mブーム＋30mヘビーリフトジブ（オフセット10°）
Ⓘ 50.0mブーム＋40mヘビーリフトジブ（オフセット10°）
Ⓙ 50.0mブーム＋47mヘビーリフトジブ（オフセット10°）
Ⓚ 50.0mブーム＋54mヘビーリフトジブ（オフセット10°）
Ⓛ 50.0mブーム＋21mヘビーリフトジブ（オフセット60°）
Ⓜ 50.0mブーム＋30mヘビーリフトジブ（オフセット60°）
Ⓝ 50.0mブーム＋40mヘビーリフトジブ（オフセット60°）
Ⓞ 50.0mブーム＋47mヘビーリフトジブ（オフセット60°）
Ⓟ 50.0mブーム＋54mヘビーリフトシブ（オフセット45°）

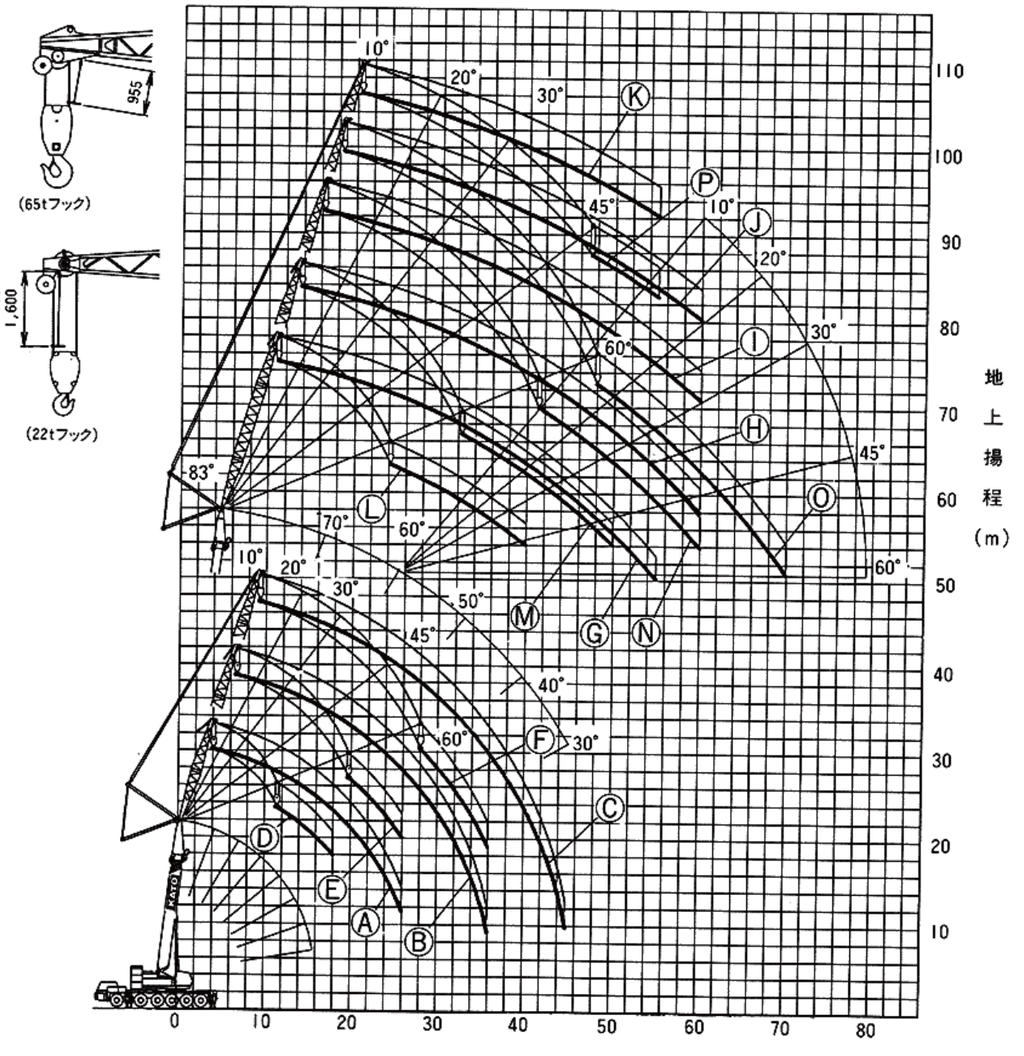


注）本図は、ブーム及びヘビーリフトジブのたわみを含んでいません。


ojk-inc.com

OJK All Terrain Crane
KATO KA-2000
OJK 株式会社OJK［オージェーケー］

# ヘビーリフトジブ(12m・54m)

## ■定格総荷重表

■ A性能

### 13.6m～50mブーム+4.35m

■13.6mブーム+4.35m+12mヘビーリフトジブ　A性能

| 作業半径 | 10° | 20° | 30° | 45° | 60° |
|---|---|---|---|---|---|
| 6.0(m) | 84.0 | | | | |
| 7.0 | 83.9 | | | | |
| 8.0 | 82.6 | 79.3 | | | |
| 9.0 | 81.4 | 75.3 | | | |
| 10.0 | 76.6 | 71.4 | 60.9 | | |
| 11.0 | 71.0 | 67.5 | 58.2 | | |
| 12.0 | 65.2 | 64.1 | 55.8 | 43.2 | |
| 14.0 | 55.8 | 58.2 | 51.6 | 40.9 | 31.9 |
| 16.0 | 48.6 | 50.9 | 48.2 | 39.1 | 31.2 |
| 18.0 | 42.8 | 43.9 | 44.6 | 37.7 | 30.9 |
| 20.0 | 37.7 | 38.3 | 38.8 | 36.7 | |
| 22.0 | 33.2 | 33.7 | 34.0 | 34.3 | |
| 24.0 | 29.5 | 29.8 | 30.0 | | |
| 26.0 | 26.3 | 26.5 | | | |
| θ(°) | 10～83 | 20～83 | 30～83 | 45～83 | 60～83 |
| 標準フック | 150 ton | | | | |
| フック重量 | 1850 kg | | | | |
| 巻掛本数 | 8本 | | | | |

(単位：ton)

■31.8mブーム+4.35m+12mヘビーリフトジブ　A性能

| 作業半径 | 10° | 20° | 30° | 45° | 60° |
|---|---|---|---|---|---|
| 9.0(m) | 40.0 | | | | |
| 10.0 | 39.5 | | | | |
| 11.0 | 38.8 | 34.9 | | | |
| 12.0 | 38.2 | 34.4 | | | |
| 14.0 | 37.0 | 33.6 | 30.6 | | |
| 16.0 | 36.0 | 32.8 | 30.0 | 26.2 | |
| 18.0 | 33.3 | 32.2 | 29.6 | 26.0 | 22.6 |
| 20.0 | 29.9 | 30.9 | 29.2 | 25.8 | 22.6 |
| 22.0 | 26.6 | 27.5 | 28.5 | 25.7 | 22.6 |
| 24.0 | 23.7 | 24.5 | 25.3 | 25.7 | 22.6 |
| 26.0 | 21.3 | 22.0 | 22.7 | 23.6 | 22.6 |
| 28.0 | 19.2 | 19.8 | 20.4 | 21.1 | |
| 30.0 | 17.3 | 17.8 | 18.3 | 18.9 | |
| 32.0 | 15.2 | 15.7 | 16.1 | 16.5 | |
| 34.0 | 13.4 | 13.9 | 14.2 | 14.4 | |
| 36.0 | 11.8 | 12.2 | 12.4 | | |
| 38.0 | 10.4 | 10.6 | 10.8 | | |
| 40.0 | 9.1 | 9.3 | 9.4 | | |
| 45.0 | 4.6 | | | | |
| θ(°) | 10～83 | 20～83 | 30～83 | 45～83 | 60～83 |
| 標準フック | 65 ton | | | | |
| フック重量 | 1000 kg | | | | |
| 巻掛本数 | 4本 | | | | |

(単位：ton)

■18.15mブーム+4.35m+12mヘビーリフトジブ　A性能

| 作業半径 | 10° | 20° | 30° | 45° | 60° |
|---|---|---|---|---|---|
| 7.0(m) | 77.0 | | | | |
| 8.0 | 77.0 | | | | |
| 9.0 | 77.0 | 77.0 | | | |
| 10.0 | 75.5 | 75.3 | | | |
| 11.0 | 69.7 | 70.1 | 60.7 | | |
| 12.0 | 64.4 | 65.1 | 58.4 | | |
| 14.0 | 55.3 | 56.7 | 54.4 | 43.5 | 34.0 |
| 16.0 | 47.8 | 49.0 | 50.1 | 41.7 | 33.2 |
| 18.0 | 40.9 | 41.9 | 42.9 | 40.1 | 32.5 |
| 20.0 | 35.5 | 36.3 | 37.0 | 37.9 | 32.4 |
| 22.0 | 31.0 | 31.6 | 32.3 | 32.9 | |
| 24.0 | 27.2 | 27.8 | 28.3 | 28.7 | |
| 26.0 | 24.1 | 24.5 | 24.9 | | |
| 28.0 | 21.4 | 21.7 | 21.9 | | |
| 30.0 | 19.0 | 19.2 | | | |
| 32.0 | 12.4 | | | | |
| θ(°) | 10～83 | 20～83 | 30～83 | 45～83 | 60～83 |
| 標準フック | 150 ton | | | | |
| フック重量 | 1850 kg | | | | |
| 巻掛本数 | 8本 | | | | |

(単位：ton)

■40.9mブーム+4.35m+54mヘビーリフトジブ　A性能

| 作業半径 | 10° | 20° | 30° | 45° | 60° |
|---|---|---|---|---|---|
| 26.0(m) | 3.8 | | | | |
| 28.0 | 3.8 | | | | |
| 30.0 | 3.8 | | | | |
| 32.0 | 3.8 | | | | |
| 34.0 | 3.8 | 3.7 | | | |
| 36.0 | 3.8 | 3.5 | | | |
| 38.0 | 3.8 | 3.3 | | | |
| 40.0 | 3.8 | 3.2 | | | |
| 45.0 | 3.4 | 2.8 | 2.4 | | |
| 50.0 | 3.0 | 2.5 | 2.2 | | |
| 55.0 | 2.7 | 2.3 | 2.0 | 1.7 | |
| 60.0 | 2.4 | 2.1 | 1.9 | 1.6 | 1.5 |
| 65.0 | 2.2 | 1.9 | 1.7 | 1.5 | 1.5 |
| 70.0 | 2.0 | 1.8 | 1.6 | 1.5 | 1.5 |
| 75.0 | | 1.7 | 1.6 | 1.5 | |
| 80.0 | | | 1.5 | 1.5 | |
| θ(°) | 40～83 | 40～83 | 40～83 | 45～83 | 60～83 |
| 標準フック | 22 ton | | | | |
| フック重量 | 880 kg | | | | |
| 巻掛本数 | 2本 | | | | |

(単位：ton)

■22.7mブーム+4.35m+12mヘビーリフトジブ　A性能

| 作業半径 | 10° | 20° | 30° | 45° | 60° |
|---|---|---|---|---|---|
| 8.0(m) | 64.0 | | | | |
| 9.0 | 64.0 | | | | |
| 10.0 | 64.0 | 64.0 | | | |
| 11.0 | 64.0 | 64.0 | 64.0 | | |
| 12.0 | 60.3 | 61.6 | 61.8 | | |
| 14.0 | 51.8 | 53.3 | 54.4 | 46.9 | |
| 16.0 | 44.8 | 46.3 | 47.7 | 45.0 | 35.5 |
| 18.0 | 39.2 | 40.4 | 41.5 | 42.9 | 34.8 |
| 20.0 | 33.7 | 34.7 | 35.7 | 36.8 | 34.4 |
| 22.0 | 29.2 | 30.1 | 30.9 | 31.8 | 32.2 |
| 24.0 | 25.5 | 26.2 | 26.9 | 27.6 | |
| 26.0 | 22.3 | 23.0 | 23.5 | 24.0 | |
| 28.0 | 19.6 | 20.2 | 20.6 | 20.9 | |
| 30.0 | 17.3 | 17.7 | 18.0 | | |
| 32.0 | 15.3 | 15.6 | 15.8 | | |
| 34.0 | 13.5 | 13.7 | | | |
| 36.0 | 9.6 | | | | |
| θ(°) | 10～83 | 20～83 | 30～83 | 45～83 | 60～83 |
| 標準フック | 65 ton | | | | |
| フック重量 | 1000 kg | | | | |
| 巻掛本数 | 6本 | | | | |

(単位：ton)

■50mブーム+4.35m+54mヘビーリフトジブ　A性能

| 作業半径 | 10° | 20° | 30° | 45° |
|---|---|---|---|---|
| 28.0(m) | 2.5 | | | |
| 30.0 | 2.5 | | | |
| 32.0 | 2.5 | | | |
| 34.0 | 2.5 | | | |
| 36.0 | 2.5 | 2.5 | | |
| 38.0 | 2.5 | 2.5 | | |
| 40.0 | 2.5 | 2.5 | | |
| 45.0 | 2.5 | 2.5 | 2.4 | |
| 50.0 | 2.5 | 2.5 | 2.2 | |
| 55.0 | 2.2 | 2.2 | 2.0 | 1.5 |
| 60.0 | | 2.1 | 1.9 | |
| 65.0 | | | 1.8 | |
| θ(°) | 51～83 | 52～83 | 52～83 | 55～83 |
| 標準フック | 22 ton | | | |
| フック重量 | 880 kg | | | |
| 巻掛本数 | 2本 | | | |

(単位：ton)

# ヘビーリフトジブ(21m)

■ A性能

### 13.6m～50mブーム+4.35m

■13.6mブーム+4.35m+21mヘビーリフトジブ　A性能

| 作業半径 | 10° | 20° | 30° | 45° | 60° |
|---|---|---|---|---|---|
| 9.0(m) | 55.5 | | | | |
| 10.0 | 54.7 | | | | |
| 11.0 | 53.6 | | | | |
| 12.0 | 52.6 | | | | |
| 14.0 | 48.7 | 41.4 | | | |
| 16.0 | 43.5 | 37.7 | 33.0 | | |
| 18.0 | 39.4 | 34.6 | 30.7 | | |
| 20.0 | 35.9 | 32.0 | 28.7 | 22.9 | |
| 22.0 | 33.0 | 29.9 | 27.0 | 21.9 | 17.2 |
| 24.0 | 30.6 | 28.0 | 25.6 | 21.0 | 16.8 |
| 26.0 | 28.1 | 26.4 | 24.3 | 20.3 | 16.5 |
| 28.0 | 25.1 | 25.0 | 23.2 | 19.7 | |
| 30.0 | 22.6 | 23.0 | 22.4 | 19.4 | |
| 32.0 | 20.4 | 20.7 | 21.0 | | |
| 34.0 | 18.6 | 18.8 | 18.9 | | |
| 36.0 | 15.9 | | | | |
| θ(°) | 10～83 | 20～83 | 30～83 | 45～83 | 60～83 |
| 標準フック | 65 ton | | | | |
| フック重量 | 1000 kg | | | | |
| 巻掛本数 | 6本 | | | | |

(単位：ton)

■31.8mブーム+4.35m+21mヘビーリフトジブ　A性能

| 作業半径 | 10° | 20° | 30° | 45° | 60° |
|---|---|---|---|---|---|
| 14.0(m) | 27.0 | | | | |
| 16.0 | 27.0 | 25.0 | | | |
| 18.0 | 27.0 | 24.1 | | | |
| 20.0 | 26.0 | 23.4 | 21.1 | | |
| 22.0 | 25.1 | 22.8 | 20.6 | | |
| 24.0 | 24.3 | 22.2 | 20.1 | 17.2 | |
| 26.0 | 22.7 | 21.7 | 19.7 | 17.0 | 14.3 |
| 28.0 | 20.9 | 21.2 | 19.4 | 16.8 | 14.2 |
| 30.0 | 18.9 | 19.9 | 19.1 | 16.6 | 14.2 |
| 32.0 | 17.0 | 17.9 | 18.7 | 16.6 | 14.2 |
| 34.0 | 15.2 | 15.9 | 16.6 | 16.5 | 14.2 |
| 36.0 | 13.5 | 14.2 | 14.8 | 15.5 | 14.2 |
| 38.0 | 12.1 | 12.7 | 13.2 | 13.8 | |
| 40.0 | 10.7 | 11.4 | 11.8 | 12.3 | |
| 45.0 | 7.9 | 8.4 | 8.7 | | |
| 50.0 | 5.7 | 6.0 | | | |
| θ(°) | 11～83 | 20～83 | 30～83 | 45～83 | 60～83 |
| 標準フック | 65 ton | | | | |
| フック重量 | 1000 kg | | | | |
| 巻掛本数 | 4本 | | | | |

(単位：ton)

■18.15mブーム+4.35m+21mヘビーリフトジブ　A性能

| 作業半径 | 10° | 20° | 30° | 45° | 60° |
|---|---|---|---|---|---|
| 10.0(m) | 53.0 | | | | |
| 11.0 | 53.0 | | | | |
| 12.0 | 53.0 | | | | |
| 14.0 | 51.8 | 43.3 | | | |
| 16.0 | 47.2 | 39.7 | 34.3 | | |
| 18.0 | 42.8 | 36.6 | 32.0 | | |
| 20.0 | 37.9 | 34.0 | 30.2 | 24.2 | |
| 22.0 | 33.4 | 31.8 | 28.5 | 23.2 | 18.1 |
| 24.0 | 29.6 | 29.9 | 27.1 | 22.3 | 17.7 |
| 26.0 | 26.3 | 27.3 | 25.8 | 21.6 | 17.4 |
| 28.0 | 23.5 | 24.2 | 24.7 | 21.0 | 17.2 |
| 30.0 | 20.9 | 21.6 | 22.1 | 20.5 | |
| 32.0 | 18.8 | 19.3 | 19.8 | 20.1 | |
| 34.0 | 16.9 | 17.4 | 17.7 | 18.1 | |
| 36.0 | 15.3 | 15.6 | 15.9 | | |
| 38.0 | 13.9 | 14.1 | 14.3 | | |
| 40.0 | 12.1 | 12.7 | | | |
| θ(°) | 10～83 | 20～83 | 30～83 | 45～83 | 60～83 |
| 標準フック | 65 ton | | | | |
| フック重量 | 1000 kg | | | | |
| 巻掛本数 | 6本 | | | | |

(単位：ton)

■40.9mブーム+4.35m+21mヘビーリフトジブ　A性能

| 作業半径 | 10° | 20° | 30° | 45° | 60° |
|---|---|---|---|---|---|
| 16.0(m) | 16.0 | | | | |
| 18.0 | 16.0 | 16.0 | | | |
| 20.0 | 16.0 | 16.0 | | | |
| 22.0 | 16.0 | 16.0 | 16.0 | | |
| 24.0 | 16.0 | 16.0 | 16.0 | | |
| 26.0 | 16.0 | 16.0 | 16.0 | 16.0 | |
| 28.0 | 16.0 | 16.0 | 16.0 | 16.0 | 14.7 |
| 30.0 | 15.0 | 15.8 | 16.0 | 16.0 | 14.6 |
| 32.0 | 13.7 | 14.5 | 15.2 | 16.0 | 14.6 |
| 34.0 | 12.6 | 13.3 | 13.9 | 14.8 | 14.6 |
| 36.0 | 11.6 | 12.2 | 12.8 | 13.5 | 14.1 |
| 38.0 | 10.6 | 11.2 | 11.7 | 12.4 | 12.8 |
| 40.0 | 9.8 | 10.3 | 10.8 | 11.3 | |
| 45.0 | 7.7 | 8.1 | 8.5 | 8.9 | |
| 50.0 | 5.4 | 5.9 | 6.2 | | |
| 55.0 | 3.5 | 3.8 | 4.0 | | |
| 60.0 | | 1.9 | | | |
| θ(°) | 21～83 | 22～83 | 30～83 | 45～83 | 60～83 |
| 標準フック | 22 ton | | | | |
| フック重量 | 880 kg | | | | |
| 巻掛本数 | 2本 | | | | |

(単位：ton)

■22.7mブーム+4.35m+21mヘビーリフトジブ　A性能

| 作業半径 | 10° | 20° | 30° | 45° | 60° |
|---|---|---|---|---|---|
| 11.0(m) | 44.0 | | | | |
| 12.0 | 44.0 | | | | |
| 14.0 | 44.0 | | | | |
| 16.0 | 44.0 | 43.9 | | | |
| 18.0 | 42.3 | 40.6 | 34.7 | | |
| 20.0 | 36.7 | 37.7 | 32.7 | | |
| 22.0 | 32.1 | 33.7 | 31.0 | 25.2 | |
| 24.0 | 28.3 | 29.6 | 29.4 | 24.3 | 19.1 |
| 26.0 | 25.0 | 26.2 | 27.3 | 23.5 | 18.7 |
| 28.0 | 22.2 | 23.2 | 24.1 | 22.8 | 18.5 |
| 30.0 | 19.8 | 20.6 | 21.3 | 22.2 | 18.3 |
| 32.0 | 17.6 | 18.3 | 19.0 | 19.7 | 18.2 |
| 34.0 | 15.8 | 16.4 | 16.9 | 17.5 | |
| 36.0 | 14.1 | 14.6 | 15.1 | 15.5 | |
| 38.0 | 12.7 | 13.1 | 13.4 | | |
| 40.0 | 11.4 | 11.7 | 12.0 | | |
| 45.0 | 7.0 | | | | |
| θ(°) | 10～83 | 20～83 | 30～83 | 45～83 | 60～83 |
| 標準フック | 65 ton | | | | |
| フック重量 | 1000 kg | | | | |
| 巻掛本数 | 4本 | | | | |

(単位：ton)

■50mブーム+4.35m+21mヘビーリフトジブ　A性能

| 作業半径 | 10° | 20° | 30° | 45° | 60° |
|---|---|---|---|---|---|
| 16.0(m) | 9.5 | | | | |
| 18.0 | 9.5 | | | | |
| 20.0 | 9.5 | 9.5 | | | |
| 22.0 | 9.5 | 9.5 | | | |
| 24.0 | 9.5 | 9.5 | 9.5 | | |
| 26.0 | 9.5 | 9.5 | 9.5 | 9.1 | |
| 28.0 | 9.5 | 9.5 | 9.5 | 9.0 | |
| 30.0 | 9.5 | 9.5 | 9.5 | 8.9 | 7.4 |
| 32.0 | 9.5 | 9.5 | 9.5 | 8.8 | 7.4 |
| 34.0 | 9.2 | 9.5 | 9.5 | 8.8 | 7.4 |
| 36.0 | 8.4 | 9.0 | 9.5 | 8.8 | 7.4 |
| 38.0 | 7.6 | 8.2 | 8.7 | 8.8 | 7.4 |
| 40.0 | 6.9 | 7.4 | 7.9 | 8.5 | 7.4 |
| 45.0 | 5.2 | 5.6 | 6.0 | 6.5 | |
| 50.0 | 3.8 | 4.2 | 4.5 | 4.9 | |
| 55.0 | 2.7 | 3.0 | 3.2 | 3.4 | |
| 60.0 | | | 2.0 | | |
| θ(°) | 38～83 | 38～83 | 38～83 | 45～83 | 60～83 |
| 標準フック | 22 ton | | | | |
| フック重量 | 880 kg | | | | |
| 巻掛本数 | 2本 | | | | |

(単位：ton)


ojk-inc.com

# ヘビーリフトジブ(30m)

## ■ A性能

### 13.6m～50mブーム+4.35m

■13.6mブーム+4.35m+30mヘビーリフトジブ　A性能

| 作業半径 | 10° | 20° | 30° | 45° | 60° |
|---|---|---|---|---|---|
| 14.0(m) | 33.0 | | | | |
| 16.0 | 32.4 | | | | |
| 18.0 | 31.8 | 29.5 | | | |
| 20.0 | 30.9 | 27.1 | | | |
| 22.0 | 28.2 | 25.1 | 22.2 | | |
| 24.0 | 26.0 | 23.3 | 20.8 | | |
| 26.0 | 24.1 | 21.8 | 19.6 | | |
| 28.0 | 22.4 | 20.5 | 18.5 | 15.0 | |
| 30.0 | 21.0 | 19.3 | 17.6 | 14.3 | 11.2 |
| 32.0 | 19.7 | 18.3 | 16.8 | 13.8 | 10.9 |
| 34.0 | 18.6 | 17.4 | 16.0 | 13.3 | 10.6 |
| 36.0 | 17.6 | 16.6 | 15.4 | 13.0 | 10.5 |
| 38.0 | 16.4 | 15.9 | 14.8 | 12.7 | |
| 40.0 | 15.1 | 15.2 | 14.4 | 12.5 | |
| 45.0 | 12.4 | | | | |
| θ(°) | 10～83 | 20～83 | 30～83 | 45～83 | 60～83 |
| 標準フック | 65 ton | | | | |
| フック重量 | 1000 kg | | | | |
| 巻掛本数 | 4本 | | | | |

(単位：ton)

■31.8mブーム+4.35m+30mヘビーリフトジブ　A性能

| 作業半径 | 10° | 20° | 30° | 45° | 60° |
|---|---|---|---|---|---|
| 16.0(m) | 19.0 | | | | |
| 18.0 | 18.6 | | | | |
| 20.0 | 18.4 | | | | |
| 22.0 | 18.2 | 18.2 | | | |
| 24.0 | 18.0 | 18.0 | | | |
| 26.0 | 17.8 | 17.6 | 15.8 | | |
| 28.0 | 17.6 | 17.1 | 15.4 | | |
| 30.0 | 17.5 | 16.6 | 15.1 | 12.7 | |
| 32.0 | 17.4 | 16.2 | 14.7 | 12.5 | |
| 34.0 | 16.4 | 15.8 | 14.4 | 12.3 | 10.1 |
| 36.0 | 14.9 | 15.5 | 14.2 | 12.1 | 10.1 |
| 38.0 | 13.4 | 14.3 | 14.0 | 12.0 | 10.0 |
| 40.0 | 12.1 | 12.9 | 13.7 | 11.9 | 10.0 |
| 45.0 | 9.3 | 10.0 | 10.6 | 11.3 | 10.0 |
| 50.0 | 7.0 | 7.6 | 8.2 | 8.6 | |
| 55.0 | 5.1 | 5.5 | 5.9 | | |
| 60.0 | 3.4 | 3.7 | | | |
| θ(°) | 14～83 | 20～83 | 30～83 | 45～83 | 60～83 |
| 標準フック | 22 ton | | | | |
| フック重量 | 880 kg | | | | |
| 巻掛本数 | 2本 | | | | |

(単位：ton)

■18.15mブーム+4.35m+30mヘビーリフトジブ　A性能

| 作業半径 | 10° | 20° | 30° | 45° | 60° |
|---|---|---|---|---|---|
| 14.0(m) | 32.0 | | | | |
| 16.0 | 32.0 | | | | |
| 18.0 | 32.0 | 30.6 | | | |
| 20.0 | 32.0 | 28.3 | | | |
| 22.0 | 30.3 | 26.3 | 23.1 | | |
| 24.0 | 28.0 | 24.5 | 21.8 | | |
| 26.0 | 26.0 | 23.0 | 20.6 | | |
| 28.0 | 24.2 | 21.6 | 19.6 | 15.8 | |
| 30.0 | 22.3 | 20.5 | 18.7 | 15.2 | |
| 32.0 | 20.1 | 19.4 | 17.8 | 14.7 | 11.5 |
| 34.0 | 18.2 | 18.5 | 17.1 | 14.2 | 11.3 |
| 36.0 | 16.5 | 17.2 | 16.4 | 13.8 | 11.1 |
| 38.0 | 15.0 | 15.6 | 15.8 | 13.5 | 11.0 |
| 40.0 | 13.7 | 14.2 | 14.7 | 13.2 | |
| 45.0 | 11.0 | 11.3 | 11.6 | | |
| 50.0 | 6.3 | | | | |
| θ(°) | 10～83 | 20～83 | 30～83 | 45～83 | 60～83 |
| 標準フック | 65 ton | | | | |
| フック重量 | 1000 kg | | | | |
| 巻掛本数 | 4本 | | | | |

(単位：ton)

■40.9mブーム+4.35m+30mヘビーリフトジブ　A性能

| 作業半径 | 10° | 20° | 30° | 45° | 60° |
|---|---|---|---|---|---|
| 18.0(m) | 11.5 | | | | |
| 20.0 | 11.5 | | | | |
| 22.0 | 11.5 | | | | |
| 24.0 | 11.0 | 11.0 | | | |
| 26.0 | 11.0 | 11.0 | | | |
| 28.0 | 11.0 | 11.0 | 11.0 | | |
| 30.0 | 11.0 | 11.0 | 11.0 | | |
| 32.0 | 11.0 | 11.0 | 11.0 | 11.0 | |
| 34.0 | 11.0 | 11.0 | 11.0 | 11.0 | |
| 36.0 | 11.0 | 11.0 | 11.0 | 11.0 | 10.2 |
| 38.0 | 10.5 | 10.8 | 11.0 | 11.0 | 10.2 |
| 40.0 | 9.6 | 10.4 | 10.8 | 11.0 | 10.1 |
| 45.0 | 7.8 | 8.4 | 9.0 | 9.9 | 10.1 |
| 50.0 | 6.3 | 6.8 | 7.3 | 8.0 | |
| 55.0 | 4.5 | 5.1 | 5.6 | 6.2 | |
| 60.0 | 2.8 | 3.3 | 3.7 | | |
| 65.0 | | | 1.9 | | |
| θ(°) | 23～83 | 23～83 | 30～83 | 45～83 | 60～83 |
| 標準フック | 22 ton | | | | |
| フック重量 | 880 kg | | | | |
| 巻掛本数 | 2本 | | | | |

(単位：ton)

■22.7mブーム+4.35m+30mヘビーリフトジブ　A性能

| 作業半径 | 10° | 20° | 30° | 45° | 60° |
|---|---|---|---|---|---|
| 14.0(m) | 30.0 | | | | |
| 16.0 | 30.0 | | | | |
| 18.0 | 30.0 | | | | |
| 20.0 | 30.0 | 29.3 | | | |
| 22.0 | 30.0 | 27.3 | | | |
| 24.0 | 29.6 | 25.6 | 22.4 | | |
| 26.0 | 26.5 | 24.0 | 21.2 | | |
| 28.0 | 23.7 | 22.7 | 20.2 | 16.4 | |
| 30.0 | 21.1 | 21.5 | 19.3 | 15.8 | |
| 32.0 | 18.9 | 19.9 | 18.5 | 15.3 | 12.0 |
| 34.0 | 17.0 | 17.9 | 17.7 | 14.8 | 11.7 |
| 36.0 | 15.3 | 16.2 | 17.0 | 14.4 | 11.5 |
| 38.0 | 13.9 | 14.6 | 15.3 | 14.0 | 11.4 |
| 40.0 | 12.6 | 13.2 | 13.9 | 13.7 | 11.3 |
| 45.0 | 9.9 | 10.3 | 10.8 | 11.2 | |
| 50.0 | 7.6 | 8.0 | 8.2 | | |
| θ(°) | 10～83 | 20～83 | 30～83 | 45～83 | 60～83 |
| 標準フック | 65 ton | | | | |
| フック重量 | 1000 kg | | | | |
| 巻掛本数 | 4本 | | | | |

(単位：ton)

■50mブーム+4.35m+30mヘビーリフトジブ　A性能

| 作業半径 | 10° | 20° | 30° | 45° | 60° |
|---|---|---|---|---|---|
| 20.0(m) | 6.6 | | | | |
| 22.0 | 6.6 | | | | |
| 24.0 | 6.6 | 6.6 | | | |
| 26.0 | 6.6 | 6.6 | | | |
| 28.0 | 6.6 | 6.6 | 6.6 | | |
| 30.0 | 6.6 | 6.6 | 6.6 | | |
| 32.0 | 6.6 | 6.6 | 6.6 | | |
| 34.0 | 6.6 | 6.6 | 6.6 | 5.8 | |
| 36.0 | 6.6 | 6.6 | 6.6 | 5.8 | |
| 38.0 | 6.3 | 6.5 | 6.6 | 5.7 | 4.5 |
| 40.0 | 6.0 | 6.3 | 6.5 | 5.6 | 4.5 |
| 45.0 | 5.1 | 5.7 | 6.0 | 5.6 | 4.5 |
| 50.0 | 3.9 | 4.4 | 4.9 | 5.6 | 4.5 |
| 55.0 | 2.8 | 3.3 | 3.7 | 4.2 | |
| 60.0 | 1.9 | 2.3 | 2.7 | 3.1 | |
| θ(°) | 40～83 | 40～83 | 40～83 | 45～83 | 64～83 |
| 標準フック | 22 ton | | | | |
| フック重量 | 880 kg | | | | |
| 巻掛本数 | 2本 | | | | |

(単位：ton)

# ヘビーリフトジブ(40m・47m)

## ■ A性能

### 31.8m～50mブーム+4.35m

■31.8mブーム+4.35m+40mヘビーリフトジブ　A性能

| 作業半径 | 10° | 20° | 30° | 45° | 60° |
|---|---|---|---|---|---|
| 20.0(m) | 11.0 | | | | |
| 22.0 | 11.0 | | | | |
| 24.0 | 11.0 | | | | |
| 26.0 | 11.0 | 11.0 | | | |
| 28.0 | 11.0 | 11.0 | | | |
| 30.0 | 11.0 | 11.0 | | | |
| 32.0 | 11.0 | 11.0 | 10.7 | | |
| 34.0 | 11.0 | 11.0 | 10.2 | | |
| 36.0 | 11.0 | 11.0 | 9.7 | | |
| 38.0 | 11.0 | 10.7 | 9.3 | 7.8 | |
| 40.0 | 11.0 | 10.2 | 8.9 | 7.5 | |
| 45.0 | 10.4 | 9.1 | 8.0 | 7.0 | 6.2 |
| 50.0 | 8.3 | 8.2 | 7.4 | 6.5 | 6.0 |
| 55.0 | 6.4 | 7.2 | 6.8 | 6.2 | 5.9 |
| 60.0 | 4.8 | 5.5 | 6.0 | 6.0 | |
| 65.0 | 3.4 | 3.9 | 4.3 | | |
| 70.0 | 2.2 | 2.4 | | | |
| θ(°) | 15～83 | 20～83 | 30～83 | 45～83 | 60～83 |
| 標準フック | 22 ton | | | | |
| フック重量 | 880 kg | | | | |
| 巻掛本数 | 2本 | | | | |

(単位：ton)

■31.8mブーム+4.35m+47mヘビーリフトジブ　A性能

| 作業半径 | 10° | 20° | 30° | 45° | 60° |
|---|---|---|---|---|---|
| 22.0(m) | 7.5 | | | | |
| 24.0 | 7.5 | | | | |
| 26.0 | 7.5 | | | | |
| 28.0 | 7.5 | | | | |
| 30.0 | 7.5 | 7.3 | | | |
| 32.0 | 7.5 | 7.0 | | | |
| 34.0 | 7.5 | 6.7 | | | |
| 36.0 | 7.3 | 6.5 | 5.8 | | |
| 38.0 | 7.0 | 6.2 | 5.6 | | |
| 40.0 | 6.7 | 6.0 | 5.5 | | |
| 45.0 | 6.1 | 5.5 | 5.0 | 4.5 | |
| 50.0 | 5.6 | 5.1 | 4.8 | 4.4 | 4.2 |
| 55.0 | 5.2 | 4.8 | 4.5 | 4.2 | 4.1 |
| 60.0 | 4.8 | 4.6 | 4.3 | 4.2 | 4.1 |
| 65.0 | 4.0 | 4.4 | 4.2 | 4.2 | |
| 70.0 | 2.7 | 3.3 | 3.7 | 4.1 | |
| θ(°) | 25～83 | 25～83 | 30～83 | 45～83 | 60～83 |
| 標準フック | 22 ton | | | | |
| フック重量 | 880 kg | | | | |
| 巻掛本数 | 2本 | | | | |

(単位：ton)

■40.9mブーム+4.35m+40mヘビーリフトジブ　A性能

| 作業半径 | 10° | 20° | 30° | 45° | 60° |
|---|---|---|---|---|---|
| 22.0(m) | 7.5 | | | | |
| 24.0 | 7.5 | | | | |
| 26.0 | 7.5 | | | | |
| 28.0 | 7.5 | 7.5 | | | |
| 30.0 | 7.5 | 7.5 | | | |
| 32.0 | 7.5 | 7.5 | | | |
| 34.0 | 7.5 | 7.5 | 7.5 | | |
| 36.0 | 7.5 | 7.5 | 7.5 | | |
| 38.0 | 7.5 | 7.5 | 7.5 | | |
| 40.0 | 7.5 | 7.5 | 7.5 | 7.5 | |
| 45.0 | 7.5 | 7.5 | 7.5 | 7.2 | 6.3 |
| 50.0 | 6.3 | 7.0 | 7.4 | 6.7 | 6.1 |
| 55.0 | 5.1 | 5.7 | 6.3 | 6.4 | 5.9 |
| 60.0 | 4.1 | 4.6 | 5.0 | 5.7 | |
| 65.0 | 2.7 | 3.3 | 3.9 | 4.5 | |
| 70.0 | | 2.0 | 2.4 | | |
| θ(°) | 25～83 | 25～83 | 30～83 | 45～83 | 60～83 |
| 標準フック | 22 ton | | | | |
| フック重量 | 880 kg | | | | |
| 巻掛本数 | 2本 | | | | |

(単位：ton)

■40.9mブーム+4.35m+47mヘビーリフトジブ　A性能

| 作業半径 | 10° | 20° | 30° | 45° | 60° |
|---|---|---|---|---|---|
| 24.0(m) | 5.5 | | | | |
| 26.0 | 5.5 | | | | |
| 28.0 | 5.5 | | | | |
| 30.0 | 5.5 | | | | |
| 32.0 | 5.5 | 5.5 | | | |
| 34.0 | 5.5 | 5.5 | | | |
| 36.0 | 5.5 | 5.5 | | | |
| 38.0 | 5.5 | 5.5 | 5.5 | | |
| 40.0 | 5.5 | 5.5 | 5.5 | | |
| 45.0 | 5.5 | 5.5 | 5.2 | | |
| 50.0 | 5.5 | 5.4 | 4.9 | 4.4 | |
| 55.0 | 4.9 | 5.1 | 4.7 | 4.3 | 4.1 |
| 60.0 | 3.9 | 4.5 | 4.5 | 4.2 | 4.1 |
| 65.0 | 3.0 | 3.6 | 4.1 | 4.1 | 4.1 |
| 70.0 | 1.9 | 2.7 | 3.2 | 3.8 | |
| 75.0 | | | | 2.4 | |
| θ(°) | 33～83 | 33～83 | 33～83 | 45～83 | 60～83 |
| 標準フック | 22 ton | | | | |
| フック重量 | 880 kg | | | | |
| 巻掛本数 | 2本 | | | | |

(単位：ton)

■50mブーム+4.35m+40mヘビーリフトジブ　A性能

| 作業半径 | 10° | 20° | 30° | 45° | 60° |
|---|---|---|---|---|---|
| 24.0(m) | 4.5 | | | | |
| 26.0 | 4.5 | | | | |
| 28.0 | 4.5 | | | | |
| 30.0 | 4.5 | 4.5 | | | |
| 32.0 | 4.5 | 4.5 | | | |
| 34.0 | 4.5 | 4.5 | | | |
| 36.0 | 4.5 | 4.5 | 4.5 | | |
| 38.0 | 4.5 | 4.5 | 4.5 | | |
| 40.0 | 4.5 | 4.5 | 4.5 | | |
| 45.0 | 4.5 | 4.5 | 4.5 | 3.7 | |
| 50.0 | 3.8 | 4.4 | 4.4 | 3.6 | 2.7 |
| 55.0 | 2.8 | 3.4 | 3.9 | 3.5 | 2.7 |
| 60.0 | 2.0 | 2.5 | 2.9 | 3.5 | 2.7 |
| 65.0 | | 1.7 | 2.1 | 2.7 | |
| 70.0 | | | | 1.7 | |
| θ(°) | 45～83 | 45～83 | 45～83 | 45～83 | 60～83 |
| 標準フック | 22 ton | | | | |
| フック重量 | 880 kg | | | | |
| 巻掛本数 | 2本 | | | | |

(単位：ton)

■50mブーム+4.35m+47mヘビーリフトジブ　A性能

| 作業半径 | 10° | 20° | 30° | 45° | 60° |
|---|---|---|---|---|---|
| 26.0(m) | 3.3 | | | | |
| 28.0 | 3.3 | | | | |
| 30.0 | 3.3 | | | | |
| 32.0 | 3.3 | | | | |
| 34.0 | 3.3 | 3.3 | | | |
| 36.0 | 3.3 | 3.3 | | | |
| 38.0 | 3.3 | 3.3 | | | |
| 40.0 | 3.3 | 3.3 | 3.1 | | |
| 45.0 | 3.3 | 3.3 | 3.1 | | |
| 50.0 | 3.3 | 3.1 | 3.1 | 2.5 | |
| 55.0 | 2.5 | 2.8 | 2.8 | 2.4 | 1.6 |
| 60.0 | 1.7 | 2.3 | 2.7 | 2.4 | 1.6 |
| 65.0 | | 1.5 | 2.1 | 2.4 | 1.6 |
| 70.0 | | | | 2.0 | 1.6 |
| θ(°) | 48～83 | 48～83 | 48～83 | 49～83 | 60～83 |
| 標準フック | 22 ton | | | | |
| フック重量 | 880 kg | | | | |
| 巻掛本数 | 2本 | | | | |

(単位：ton)


ojk-inc.com

OJK All Terrain Crane
KATO KA-2000
OJK 株式会社OJK［オージェーケー］

# ヘビーリフトジブ(12m・54m)

## ■ B性能

### 13.6m～50mブーム+4.35m

■13.6mブーム+4.35m+12mヘビーリフトジブ　B性能

| 作業半径 | 10° | 20° | 30° | 45° | 60° |
|---|---|---|---|---|---|
| 6.0(m) | 84.0 | | | | |
| 7.0 | 83.9 | | | | |
| 8.0 | 82.6 | 79.3 | | | |
| 9.0 | 81.4 | 75.3 | | | |
| 10.0 | 76.6 | 71.4 | 60.9 | | |
| 11.0 | 69.5 | 67.5 | 58.2 | | |
| 12.0 | 62.7 | 64.1 | 55.8 | 43.2 | |
| 14.0 | 52.1 | 53.2 | 51.6 | 40.9 | 31.9 |
| 16.0 | 44.1 | 45.0 | 45.9 | 39.1 | 31.2 |
| 18.0 | 37.9 | 38.6 | 39.3 | 37.7 | 30.9 |
| 20.0 | 32.8 | 33.3 | 33.7 | 34.2 | |
| 22.0 | 28.3 | 28.7 | 29.0 | 29.2 | |
| 24.0 | 24.7 | 25.0 | 25.1 | | |
| 26.0 | 21.7 | 21.9 | | | |
| θ(°) | 10～83 | 20～83 | 30～83 | 45～83 | 60～83 |
| 標準フック | 150 ton | | | | |
| フック重量 | 1850 kg | | | | |
| 巻掛本数 | 8本 | | | | |

(単位：ton)

■31.8mブーム+4.35m+12mヘビーリフトジブ　B性能

| 作業半径 | 10° | 20° | 30° | 45° | 60° |
|---|---|---|---|---|---|
| 9.0(m) | 40.0 | | | | |
| 10.0 | 39.5 | | | | |
| 11.0 | 38.8 | 34.9 | | | |
| 12.0 | 38.2 | 34.4 | | | |
| 14.0 | 37.0 | 33.6 | 30.6 | | |
| 16.0 | 36.0 | 32.8 | 30.0 | 26.2 | |
| 18.0 | 33.3 | 32.2 | 29.6 | 26.0 | 22.6 |
| 20.0 | 29.1 | 30.2 | 29.2 | 25.8 | 22.6 |
| 22.0 | 24.9 | 25.8 | 26.6 | 25.7 | 22.6 |
| 24.0 | 21.4 | 22.1 | 22.8 | 23.5 | 22.6 |
| 26.0 | 18.4 | 19.1 | 19.6 | 20.2 | 20.5 |
| 28.0 | 16.0 | 16.5 | 17.0 | 17.5 | |
| 30.0 | 13.9 | 14.4 | 14.8 | 15.2 | |
| 32.0 | 12.1 | 12.5 | 12.9 | 13.2 | |
| 34.0 | 10.6 | 10.9 | 11.2 | 11.4 | |
| 36.0 | 9.2 | 9.5 | 9.7 | | |
| 38.0 | 7.8 | 8.1 | 8.3 | | |
| 40.0 | 6.6 | 6.8 | 6.9 | | |
| 45.0 | 3.9 | | | | |
| θ(°) | 10～83 | 20～83 | 30～83 | 45～83 | 60～83 |
| 標準フック | 65 ton | | | | |
| フック重量 | 1000 kg | | | | |
| 巻掛本数 | 4本 | | | | |

(単位：ton)

■18.15mブーム+4.35m+12mヘビーリフトジブ　B性能

| 作業半径 | 10° | 20° | 30° | 45° | 60° |
|---|---|---|---|---|---|
| 7.0(m) | 77.0 | | | | |
| 8.0 | 77.0 | | | | |
| 9.0 | 77.0 | 77.0 | | | |
| 10.0 | 75.4 | 75.3 | | | |
| 11.0 | 67.3 | 69.3 | 60.7 | | |
| 12.0 | 60.5 | 62.3 | 58.4 | | |
| 14.0 | 49.9 | 51.3 | 52.7 | 43.5 | 34.0 |
| 16.0 | 41.9 | 43.1 | 44.2 | 41.7 | 33.2 |
| 18.0 | 35.7 | 36.7 | 37.6 | 38.7 | 32.5 |
| 20.0 | 30.7 | 31.5 | 32.2 | 32.9 | 32.4 |
| 22.0 | 26.4 | 27.0 | 27.5 | 28.0 | |
| 24.0 | 22.8 | 23.3 | 23.7 | 24.0 | |
| 26.0 | 19.9 | 20.2 | 20.5 | | |
| 28.0 | 17.4 | 17.7 | 17.8 | | |
| 30.0 | 15.4 | 15.5 | | | |
| 32.0 | 12.4 | | | | |
| θ(°) | 10～83 | 20～83 | 30～83 | 45～83 | 60～83 |
| 標準フック | 150 ton | | | | |
| フック重量 | 1850 kg | | | | |
| 巻掛本数 | 8本 | | | | |

(単位：ton)

■40.9mブーム+4.35m+54mヘビーリフトジブ　B性能

| 作業半径 | 10° | 20° | 30° | 45° | 60° |
|---|---|---|---|---|---|
| 26.0(m) | 3.8 | | | | |
| 28.0 | 3.8 | | | | |
| 30.0 | 3.8 | | | | |
| 32.0 | 3.8 | | | | |
| 34.0 | 3.8 | 3.7 | | | |
| 36.0 | 3.8 | 3.5 | | | |
| 38.0 | 3.8 | 3.3 | | | |
| 40.0 | 3.8 | 3.2 | | | |
| 45.0 | 3.4 | 2.8 | 2.4 | | |
| 50.0 | 3.0 | 2.5 | 2.2 | | |
| 55.0 | 2.7 | 2.3 | 2.0 | 1.7 | |
| 60.0 | 2.4 | 2.1 | 1.9 | 1.6 | 1.5 |
| 65.0 | 1.8 | 1.9 | 1.7 | 1.5 | 1.5 |
| 70.0 | | 1.6 | 1.6 | 1.5 | 1.5 |
| 75.0 | | | | 1.5 | |
| θ(°) | 49～83 | 50～83 | 51～83 | 56～83 | 60～83 |
| 標準フック | 22 ton | | | | |
| フック重量 | 880 kg | | | | |
| 巻掛本数 | 2本 | | | | |

(単位：ton)

■22.7mブーム+4.35m+12mヘビーリフトジブ　B性能

| 作業半径 | 10° | 20° | 30° | 45° | 60° |
|---|---|---|---|---|---|
| 8.0(m) | 64.0 | | | | |
| 9.0 | 64.0 | | | | |
| 10.0 | 64.0 | 64.0 | | | |
| 11.0 | 64.0 | 64.0 | 64.0 | | |
| 12.0 | 58.8 | 60.9 | 61.8 | | |
| 14.0 | 48.1 | 49.8 | 51.4 | 46.9 | |
| 16.0 | 40.1 | 41.6 | 42.9 | 44.6 | 35.5 |
| 18.0 | 33.9 | 35.1 | 36.3 | 37.6 | 34.8 |
| 20.0 | 29.0 | 30.0 | 30.9 | 32.0 | 32.5 |
| 22.0 | 24.9 | 25.6 | 26.3 | 27.1 | 27.4 |
| 24.0 | 21.3 | 21.9 | 22.5 | 23.1 | |
| 26.0 | 18.4 | 18.9 | 19.4 | 19.8 | |
| 28.0 | 16.0 | 16.4 | 16.7 | 17.0 | |
| 30.0 | 13.9 | 14.3 | 14.5 | | |
| 32.0 | 12.2 | 12.4 | 12.5 | | |
| 34.0 | 10.6 | 10.8 | | | |
| 36.0 | 9.3 | | | | |
| θ(°) | 10～83 | 20～83 | 30～83 | 45～83 | 60～83 |
| 標準フック | 65 ton | | | | |
| フック重量 | 1000 kg | | | | |
| 巻掛本数 | 6本 | | | | |

(単位：ton)

■50mブーム+4.35m+54mヘビーリフトジブ　B性能

| 作業半径 | 10° | 20° | 30° | 45° |
|---|---|---|---|---|
| 28.0(m) | 2.5 | | | |
| 30.0 | 2.5 | | | |
| 32.0 | 2.5 | | | |
| 34.0 | 2.5 | | | |
| 36.0 | 2.5 | 2.5 | | |
| 38.0 | 2.5 | 2.5 | | |
| 40.0 | 2.5 | 2.5 | | |
| 45.0 | 2.5 | 2.5 | 2.4 | |
| 50.0 | 2.5 | 2.5 | 2.2 | |
| 55.0 | 2.2 | 2.2 | 2.0 | 1.5 |
| 60.0 | | 2.1 | 1.9 | |
| 65.0 | | | 1.8 | |
| θ(°) | 58～83 | 59～83 | 60～83 | 60～83 |
| 標準フック | 22 ton | | | |
| フック重量 | 880 kg | | | |
| 巻掛本数 | 2本 | | | |

(単位：ton)

# ヘビーリフトジブ(21m)

## ■ B性能

### 13.6m～50mブーム+4.35m

■13.6mブーム+4.35m+21mヘビーリフトジブ　B性能

| 作業半径 | 10° | 20° | 30° | 45° | 60° |
|---|---|---|---|---|---|
| 9.0(m) | 55.5 | | | | |
| 10.0 | 54.7 | | | | |
| 11.0 | 53.6 | | | | |
| 12.0 | 52.6 | | | | |
| 14.0 | 48.7 | 41.4 | | | |
| 16.0 | 43.5 | 37.7 | 33.0 | | |
| 18.0 | 39.4 | 34.6 | 30.7 | | |
| 20.0 | 34.8 | 32.0 | 28.7 | 22.9 | |
| 22.0 | 30.2 | 29.9 | 27.0 | 21.9 | 17.2 |
| 24.0 | 26.5 | 27.2 | 25.6 | 21.0 | 16.8 |
| 26.0 | 23.5 | 24.1 | 24.3 | 20.3 | 16.5 |
| 28.0 | 20.9 | 21.4 | 21.9 | 19.7 | |
| 30.0 | 18.8 | 19.2 | 19.6 | 19.4 | |
| 32.0 | 16.9 | 17.3 | 17.5 | | |
| 34.0 | 15.3 | 15.6 | 15.7 | | |
| 36.0 | 14.0 | | | | |
| θ(°) | 10～83 | 20～83 | 30～83 | 45～83 | 60～83 |
| 標準フック | 65 ton | | | | |
| フック重量 | 1000 kg | | | | |
| 巻掛本数 | 6本 | | | | |

(単位：ton)

■31.8mブーム+4.35m+21mヘビーリフトジブ　B性能

| 作業半径 | 10° | 20° | 30° | 45° | 60° |
|---|---|---|---|---|---|
| 14.0(m) | 27.0 | | | | |
| 16.0 | 27.0 | 25.0 | | | |
| 18.0 | 27.0 | 24.1 | | | |
| 20.0 | 26.0 | 23.4 | 21.1 | | |
| 22.0 | 25.1 | 22.8 | 20.6 | | |
| 24.0 | 23.2 | 22.2 | 20.1 | 17.2 | |
| 26.0 | 20.2 | 21.3 | 19.7 | 17.0 | 14.3 |
| 28.0 | 17.7 | 18.7 | 19.4 | 16.8 | 14.2 |
| 30.0 | 15.5 | 16.4 | 17.3 | 16.6 | 14.2 |
| 32.0 | 13.7 | 14.5 | 15.2 | 16.1 | 14.2 |
| 34.0 | 12.1 | 12.8 | 13.5 | 14.2 | 14.2 |
| 36.0 | 10.7 | 11.3 | 11.9 | 12.6 | 12.9 |
| 38.0 | 9.4 | 10.0 | 10.5 | 11.1 | |
| 40.0 | 8.3 | 8.9 | 9.3 | 9.7 | |
| 45.0 | 5.7 | 6.2 | 6.5 | | |
| 50.0 | 3.5 | 3.8 | 3.9 | | |
| θ(°) | 20～83 | 20～83 | 30～83 | 45～83 | 60～83 |
| 標準フック | 65 ton | | | | |
| フック重量 | 1000 kg | | | | |
| 巻掛本数 | 4本 | | | | |

(単位：ton)

■18.15mブーム+4.35m+21mヘビーリフトジブ　B性能

| 作業半径 | 10° | 20° | 30° | 45° | 60° |
|---|---|---|---|---|---|
| 10.0(m) | 53.0 | | | | |
| 11.0 | 53.0 | | | | |
| 12.0 | 53.0 | | | | |
| 14.0 | 51.8 | 43.3 | | | |
| 16.0 | 44.6 | 39.7 | 34.3 | | |
| 18.0 | 38.3 | 36.6 | 32.0 | | |
| 20.0 | 33.1 | 34.0 | 30.2 | 24.2 | |
| 22.0 | 28.6 | 29.7 | 28.5 | 23.2 | 18.1 |
| 24.0 | 24.9 | 25.8 | 26.7 | 22.3 | 17.7 |
| 26.0 | 21.9 | 22.7 | 23.5 | 21.6 | 17.4 |
| 28.0 | 19.3 | 20.0 | 20.7 | 21.0 | 17.2 |
| 30.0 | 17.2 | 17.8 | 18.4 | 19.0 | |
| 32.0 | 15.3 | 15.9 | 16.3 | 16.8 | |
| 34.0 | 13.8 | 14.2 | 14.5 | 14.9 | |
| 36.0 | 12.4 | 12.7 | 13.0 | | |
| 38.0 | 11.1 | 11.4 | 11.5 | | |
| 40.0 | 10.0 | 10.1 | | | |
| θ(°) | 10～83 | 20～83 | 30～83 | 45～83 | 60～83 |
| 標準フック | 65 ton | | | | |
| フック重量 | 1000 kg | | | | |
| 巻掛本数 | 6本 | | | | |

(単位：ton)

■40.9mブーム+4.35m+21mヘビーリフトジブ　B性能

| 作業半径 | 10° | 20° | 30° | 45° | 60° |
|---|---|---|---|---|---|
| 16.0(m) | 16.0 | | | | |
| 18.0 | 16.0 | 16.0 | | | |
| 20.0 | 16.0 | 16.0 | | | |
| 22.0 | 16.0 | 16.0 | 16.0 | | |
| 24.0 | 16.0 | 16.0 | 16.0 | | |
| 26.0 | 16.0 | 16.0 | 16.0 | 16.0 | |
| 28.0 | 16.0 | 16.0 | 16.0 | 16.0 | 14.7 |
| 30.0 | 15.0 | 15.8 | 16.0 | 16.0 | 14.6 |
| 32.0 | 13.5 | 14.4 | 15.2 | 16.0 | 14.6 |
| 34.0 | 11.9 | 12.7 | 13.5 | 14.4 | 14.6 |
| 36.0 | 10.5 | 11.2 | 11.9 | 12.7 | 13.2 |
| 38.0 | 9.3 | 9.9 | 10.5 | 11.2 | 11.6 |
| 40.0 | 8.1 | 8.8 | 9.3 | 9.9 | |
| 45.0 | 5.4 | 6.0 | 6.5 | 7.0 | |
| 50.0 | 3.2 | 3.7 | 4.0 | | |
| θ(°) | 30～83 | 30～83 | 35～83 | 45～83 | 60～83 |
| 標準フック | 22 ton | | | | |
| フック重量 | 880 kg | | | | |
| 巻掛本数 | 2本 | | | | |

(単位：ton)

■22.7mブーム+4.35m+21mヘビーリフトジブ　B性能

| 作業半径 | 10° | 20° | 30° | 45° | 60° |
|---|---|---|---|---|---|
| 11.0(m) | 44.0 | | | | |
| 12.0 | 44.0 | | | | |
| 14.0 | 44.0 | | | | |
| 16.0 | 43.4 | 43.9 | | | |
| 18.0 | 37.1 | 39.1 | 34.7 | | |
| 20.0 | 32.0 | 33.6 | 32.7 | | |
| 22.0 | 27.5 | 28.8 | 30.1 | 25.2 | |
| 24.0 | 23.8 | 24.9 | 26.0 | 24.3 | 19.1 |
| 26.0 | 20.8 | 21.8 | 22.7 | 23.5 | 18.7 |
| 28.0 | 18.2 | 19.1 | 19.9 | 21.0 | 18.5 |
| 30.0 | 16.1 | 16.8 | 17.6 | 18.4 | 18.3 |
| 32.0 | 14.2 | 14.9 | 15.5 | 16.2 | 16.6 |
| 34.0 | 12.6 | 13.2 | 13.7 | 14.3 | |
| 36.0 | 11.2 | 11.7 | 12.1 | 12.5 | |
| 38.0 | 10.0 | 10.4 | 10.7 | | |
| 40.0 | 8.9 | 9.2 | 9.4 | | |
| 45.0 | 6.3 | | | | |
| θ(°) | 10～83 | 20～83 | 30～83 | 45～83 | 60～83 |
| 標準フック | 65 ton | | | | |
| フック重量 | 1000 kg | | | | |
| 巻掛本数 | 4本 | | | | |

(単位：ton)

■50mブーム+4.35m+21mヘビーリフトジブ　B性能

| 作業半径 | 10° | 20° | 30° | 45° | 60° |
|---|---|---|---|---|---|
| 16.0(m) | 9.5 | | | | |
| 18.0 | 9.5 | | | | |
| 20.0 | 9.5 | 9.5 | | | |
| 22.0 | 9.5 | 9.5 | | | |
| 24.0 | 9.5 | 9.5 | 9.5 | | |
| 26.0 | 9.5 | 9.5 | 9.5 | 9.1 | |
| 28.0 | 9.5 | 9.5 | 9.5 | 9.0 | |
| 30.0 | 9.5 | 9.5 | 9.5 | 8.9 | 7.4 |
| 32.0 | 9.5 | 9.5 | 9.5 | 8.8 | 7.4 |
| 34.0 | 9.2 | 9.5 | 9.5 | 8.8 | 7.4 |
| 36.0 | 8.4 | 9.0 | 9.5 | 8.8 | 7.4 |
| 38.0 | 7.6 | 8.2 | 8.7 | 8.8 | 7.4 |
| 40.0 | 6.9 | 7.4 | 7.9 | 8.5 | 7.4 |
| 45.0 | 5.0 | 5.6 | 6.0 | 6.5 | |
| 50.0 | 2.8 | 3.4 | 3.9 | 4.4 | |
| θ(°) | 45～83 | 45～83 | 45～83 | 47～83 | 60～83 |
| 標準フック | 22 ton | | | | |
| フック重量 | 880 kg | | | | |
| 巻掛本数 | 2本 | | | | |

(単位：ton)


ojk-inc.com

OJK All Terrain Crane
KATO KA-2000
株式会社OJK［オージェーケー］

# ヘビーリフトジブ（30m）

■ B性能

## 13.6m～50mブーム+4.35m

■13.6mブーム+4.35m+30mヘビーリフトジブ　B性能

| 作業半径 | 10° | 20° | 30° | 45° | 60° |
|---|---|---|---|---|---|
| 14.0（m） | 33.0 | | | | |
| 16.0 | 32.4 | | | | |
| 18.0 | 31.8 | 29.5 | | | |
| 20.0 | 30.9 | 27.1 | | | |
| 22.0 | 28.2 | 25.1 | 22.2 | | |
| 24.0 | 26.0 | 23.3 | 20.8 | | |
| 26.0 | 24.1 | 21.8 | 19.6 | | |
| 28.0 | 22.0 | 20.5 | 18.5 | 15.0 | |
| 30.0 | 19.8 | 19.3 | 17.6 | 14.3 | 11.2 |
| 32.0 | 17.9 | 18.3 | 16.8 | 13.8 | 10.9 |
| 34.0 | 16.3 | 16.8 | 16.0 | 13.3 | 10.6 |
| 36.0 | 14.9 | 15.3 | 15.4 | 13.0 | 10.5 |
| 38.0 | 13.6 | 14.0 | 14.4 | 12.7 | |
| 40.0 | 12.5 | 12.8 | 13.1 | 12.5 | |
| θ（°） | 10～83 | 20～83 | 30～83 | 45～83 | 60～83 |
| 標準フック | 65 ton | | | | |
| フック重量 | 1000 kg | | | | |
| 巻掛本数 | 4本 | | | | |

（単位：ton）

■31.8mブーム+4.35m+30mヘビーリフトジブ　B性能

| 作業半径 | 10° | 20° | 30° | 45° | 60° |
|---|---|---|---|---|---|
| 16.0（m） | 19.0 | | | | |
| 18.0 | 18.6 | | | | |
| 20.0 | 18.4 | | | | |
| 22.0 | 18.2 | 18.2 | | | |
| 24.0 | 18.0 | 18.0 | | | |
| 26.0 | 17.8 | 17.6 | 15.8 | | |
| 28.0 | 17.6 | 17.1 | 15.4 | | |
| 30.0 | 16.9 | 16.6 | 15.1 | 12.7 | |
| 32.0 | 15.1 | 16.2 | 14.7 | 12.5 | |
| 34.0 | 13.4 | 14.5 | 14.4 | 12.3 | 10.1 |
| 36.0 | 12.0 | 12.9 | 13.8 | 12.1 | 10.1 |
| 38.0 | 10.7 | 11.6 | 12.4 | 12.0 | 10.0 |
| 40.0 | 9.6 | 10.4 | 11.1 | 11.9 | 10.0 |
| 45.0 | 7.1 | 7.8 | 8.4 | 9.1 | 9.4 |
| 50.0 | 4.9 | 5.6 | 6.1 | 6.6 | |
| 55.0 | 3.1 | 3.5 | 3.9 | | |
| θ（°） | 20～83 | 25～83 | 30～83 | 45～83 | 60～83 |
| 標準フック | 22 ton | | | | |
| フック重量 | 880 kg | | | | |
| 巻掛本数 | 2本 | | | | |

（単位：ton）

■18.15mブーム+4.35m+30mヘビーリフトジブ　B性能

| 作業半径 | 10° | 20° | 30° | 45° | 60° |
|---|---|---|---|---|---|
| 14.0（m） | 32.0 | | | | |
| 16.0 | 32.0 | | | | |
| 18.0 | 32.0 | 30.6 | | | |
| 20.0 | 32.0 | 28.3 | | | |
| 22.0 | 30.1 | 26.3 | 23.1 | | |
| 24.0 | 26.3 | 24.5 | 21.8 | | |
| 26.0 | 23.2 | 23.0 | 20.6 | | |
| 28.0 | 20.7 | 21.6 | 19.6 | 15.8 | |
| 30.0 | 18.5 | 19.4 | 18.7 | 15.2 | |
| 32.0 | 16.6 | 17.4 | 17.8 | 14.7 | 11.5 |
| 34.0 | 15.0 | 15.7 | 16.4 | 14.2 | 11.3 |
| 36.0 | 13.5 | 14.2 | 14.8 | 13.8 | 11.1 |
| 38.0 | 12.2 | 12.8 | 13.4 | 13.5 | 11.0 |
| 40.0 | 11.1 | 11.6 | 12.1 | 12.7 | |
| 45.0 | 8.8 | 9.1 | 9.4 | | |
| 50.0 | 6.3 | | | | |
| θ（°） | 10～83 | 20～83 | 30～83 | 45～83 | 60～83 |
| 標準フック | 65 ton | | | | |
| フック重量 | 1000 kg | | | | |
| 巻掛本数 | 4本 | | | | |

（単位：ton）

■40.9mブーム+4.35m+30mヘビーリフトジブ　B性能

| 作業半径 | 10° | 20° | 30° | 45° | 60° |
|---|---|---|---|---|---|
| 18.0（m） | 11.5 | | | | |
| 20.0 | 11.5 | | | | |
| 22.0 | 11.5 | | | | |
| 24.0 | 11.0 | 11.0 | | | |
| 26.0 | 11.0 | 11.0 | | | |
| 28.0 | 11.0 | 11.0 | 11.0 | | |
| 30.0 | 11.0 | 11.0 | 11.0 | | |
| 32.0 | 11.0 | 11.0 | 11.0 | 11.0 | |
| 34.0 | 11.0 | 11.0 | 11.0 | 11.0 | |
| 36.0 | 11.0 | 11.0 | 11.0 | 11.0 | 10.2 |
| 38.0 | 10.2 | 10.8 | 11.0 | 11.0 | 10.2 |
| 40.0 | 9.1 | 10.0 | 10.8 | 11.0 | 10.1 |
| 45.0 | 6.5 | 7.4 | 8.1 | 9.0 | 9.5 |
| 50.0 | 4.3 | 5.1 | 5.8 | 6.6 | |
| 55.0 | 2.4 | 3.1 | 3.7 | 4.2 | |
| θ（°） | 36～83 | 38～83 | 38～83 | 45～83 | 60～83 |
| 標準フック | 22 ton | | | | |
| フック重量 | 880 kg | | | | |
| 巻掛本数 | 2本 | | | | |

（単位：ton）

■22.7mブーム+4.35m+30mヘビーリフトジブ　B性能

| 作業半径 | 10° | 20° | 30° | 45° | 60° |
|---|---|---|---|---|---|
| 14.0（m） | 30.0 | | | | |
| 16.0 | 30.0 | | | | |
| 18.0 | 30.0 | | | | |
| 20.0 | 30.0 | 29.3 | | | |
| 22.0 | 29.0 | 27.3 | | | |
| 24.0 | 25.2 | 25.6 | 22.4 | | |
| 26.0 | 22.1 | 23.5 | 21.2 | | |
| 28.0 | 19.5 | 20.8 | 20.2 | 16.4 | |
| 30.0 | 17.3 | 18.5 | 19.3 | 15.8 | |
| 32.0 | 15.4 | 16.5 | 17.4 | 15.3 | 12.0 |
| 34.0 | 13.8 | 14.7 | 15.6 | 14.8 | 11.7 |
| 36.0 | 12.4 | 13.2 | 14.0 | 14.4 | 11.5 |
| 38.0 | 11.1 | 11.8 | 12.5 | 13.5 | 11.4 |
| 40.0 | 10.0 | 10.6 | 11.3 | 12.0 | 11.3 |
| 45.0 | 7.6 | 8.1 | 8.5 | 9.0 | |
| 50.0 | 5.6 | 5.9 | 6.2 | | |
| θ（°） | 15～83 | 20～83 | 30～83 | 45～83 | 60～83 |
| 標準フック | 65 ton | | | | |
| フック重量 | 1000 kg | | | | |
| 巻掛本数 | 4本 | | | | |

（単位：ton）

■50mブーム+4.35m+30mヘビーリフトジブ　B性能

| 作業半径 | 10° | 20° | 30° | 45° | 60° |
|---|---|---|---|---|---|
| 20.0（m） | 6.6 | | | | |
| 22.0 | 6.6 | | | | |
| 24.0 | 6.6 | 6.6 | | | |
| 26.0 | 6.6 | 6.6 | | | |
| 28.0 | 6.6 | 6.6 | 6.6 | | |
| 30.0 | 6.6 | 6.6 | 6.6 | | |
| 32.0 | 6.6 | 6.6 | 6.6 | | |
| 34.0 | 6.6 | 6.6 | 6.6 | 5.8 | |
| 36.0 | 6.6 | 6.6 | 6.6 | 5.8 | |
| 38.0 | 6.3 | 6.5 | 6.6 | 5.7 | 4.5 |
| 40.0 | 6.0 | 6.3 | 6.5 | 5.6 | 4.5 |
| 45.0 | 5.1 | 5.7 | 6.0 | 5.6 | 4.5 |
| 50.0 | 3.7 | 4.4 | 4.9 | 5.6 | 4.5 |
| 55.0 | | 2.7 | 3.4 | 4.1 | |
| θ（°） | 50～83 | 51～83 | 51～83 | 52～83 | 60～83 |
| 標準フック | 22 ton | | | | |
| フック重量 | 880 kg | | | | |
| 巻掛本数 | 2本 | | | | |

（単位：ton）

# ヘビーリフトジブ（40m・47m）

■ B性能

## 31.8m～50mブーム+4.35m

■31.8mブーム+4.35m+40mヘビーリフトジブ　B性能

| 作業半径 | 10° | 20° | 30° | 45° | 60° |
|---|---|---|---|---|---|
| 20.0（m） | 11.0 | | | | |
| 22.0 | 11.0 | | | | |
| 24.0 | 11.0 | | | | |
| 26.0 | 11.0 | 11.0 | | | |
| 28.0 | 11.0 | 11.0 | | | |
| 30.0 | 11.0 | 11.0 | | | |
| 32.0 | 11.0 | 11.0 | 10.7 | | |
| 34.0 | 11.0 | 11.0 | 10.2 | | |
| 36.0 | 11.0 | 11.0 | 9.7 | | |
| 38.0 | 11.0 | 10.7 | 9.3 | 7.8 | |
| 40.0 | 10.7 | 10.2 | 8.9 | 7.5 | |
| 45.0 | 8.3 | 9.1 | 8.0 | 7.0 | 6.2 |
| 50.0 | 6.3 | 7.1 | 7.4 | 6.5 | 6.0 |
| 55.0 | 4.5 | 5.3 | 6.0 | 6.2 | 5.9 |
| 60.0 | 3.0 | 3.6 | 4.2 | 4.8 | |
| 65.0 | 1.7 | 2.2 | 2.5 | | |
| θ（°） | 22～83 | 25～83 | 30～83 | 45～83 | 60～83 |
| 標準フック | 22 ton | | | | |
| フック重量 | 880 kg | | | | |
| 巻掛本数 | 2本 | | | | |

（単位：ton）

■31.8mブーム+4.35m+47mヘビーリフトジブ　B性能

| 作業半径 | 10° | 20° | 30° | 45° | 60° |
|---|---|---|---|---|---|
| 22.0（m） | 7.5 | | | | |
| 24.0 | 7.5 | | | | |
| 26.0 | 7.5 | | | | |
| 28.0 | 7.5 | | | | |
| 30.0 | 7.5 | 7.3 | | | |
| 32.0 | 7.5 | 7.0 | | | |
| 34.0 | 7.5 | 6.7 | | | |
| 36.0 | 7.3 | 6.5 | 5.8 | | |
| 38.0 | 7.0 | 6.2 | 5.6 | | |
| 40.0 | 6.7 | 6.0 | 5.5 | | |
| 45.0 | 6.1 | 5.5 | 5.0 | 4.5 | |
| 50.0 | 5.6 | 5.1 | 4.8 | 4.4 | 4.2 |
| 55.0 | 5.1 | 4.8 | 4.5 | 4.2 | 4.1 |
| 60.0 | 3.5 | 4.4 | 4.3 | 4.2 | 4.1 |
| 65.0 | 2.2 | 2.9 | 3.6 | 4.2 | |
| 70.0 | | 1.7 | 2.1 | | |
| θ（°） | 26～83 | 30～83 | 32～83 | 45～83 | 60～83 |
| 標準フック | 22 ton | | | | |
| フック重量 | 880 kg | | | | |
| 巻掛本数 | 2本 | | | | |

（単位：ton）

■40.9mブーム+4.35m+40mヘビーリフトジブ　B性能

| 作業半径 | 10° | 20° | 30° | 45° | 60° |
|---|---|---|---|---|---|
| 22.0（m） | 7.5 | | | | |
| 24.0 | 7.5 | | | | |
| 26.0 | 7.5 | | | | |
| 28.0 | 7.5 | 7.5 | | | |
| 30.0 | 7.5 | 7.5 | | | |
| 32.0 | 7.5 | 7.5 | | | |
| 34.0 | 7.5 | 7.5 | 7.5 | | |
| 36.0 | 7.5 | 7.5 | 7.5 | | |
| 38.0 | 7.5 | 7.5 | 7.5 | | |
| 40.0 | 7.5 | 7.5 | 7.5 | 7.5 | |
| 45.0 | 7.5 | 7.5 | 7.5 | 7.2 | 6.3 |
| 50.0 | 5.6 | 6.7 | 7.4 | 6.7 | 6.1 |
| 55.0 | 3.8 | 4.7 | 5.6 | 6.4 | 5.9 |
| 60.0 | 2.2 | 3.0 | 3.8 | 4.7 | |
| 65.0 | | 1.6 | 2.2 | 2.8 | |
| θ（°） | 40～83 | 40～83 | 40～83 | 45～83 | 60～83 |
| 標準フック | 22 ton | | | | |
| フック重量 | 880 kg | | | | |
| 巻掛本数 | 2本 | | | | |

（単位：ton）

■40.9mブーム+4.35m+47mヘビーリフトジブ　B性能

| 作業半径 | 10° | 20° | 30° | 45° | 60° |
|---|---|---|---|---|---|
| 24.0（m） | 5.5 | | | | |
| 26.0 | 5.5 | | | | |
| 28.0 | 5.5 | | | | |
| 30.0 | 5.5 | | | | |
| 32.0 | 5.5 | 5.5 | | | |
| 34.0 | 5.5 | 5.5 | | | |
| 36.0 | 5.5 | 5.5 | | | |
| 38.0 | 5.5 | 5.5 | 5.5 | | |
| 40.0 | 5.5 | 5.5 | 5.5 | | |
| 45.0 | 5.5 | 5.5 | 5.2 | | |
| 50.0 | 5.5 | 5.4 | 4.9 | 4.4 | |
| 55.0 | 4.3 | 5.1 | 4.7 | 4.3 | 4.1 |
| 60.0 | 2.8 | 3.8 | 4.5 | 4.2 | 4.1 |
| 65.0 | 1.5 | 2.3 | 3.1 | 4.1 | 4.1 |
| 70.0 | | | 1.7 | 2.5 | |
| θ（°） | 45～83 | 45～83 | 46～83 | 46～83 | 60～83 |
| 標準フック | 22 ton | | | | |
| フック重量 | 880 kg | | | | |
| 巻掛本数 | 2本 | | | | |

（単位：ton）

■50mブーム+4.35m+40mヘビーリフトジブ　B性能

| 作業半径 | 10° | 20° | 30° | 45° | 60° |
|---|---|---|---|---|---|
| 24.0（m） | 4.5 | | | | |
| 26.0 | 4.5 | | | | |
| 28.0 | 4.5 | | | | |
| 30.0 | 4.5 | 4.5 | | | |
| 32.0 | 4.5 | 4.5 | | | |
| 34.0 | 4.5 | 4.5 | | | |
| 36.0 | 4.5 | 4.5 | 4.5 | | |
| 38.0 | 4.5 | 4.5 | 4.5 | | |
| 40.0 | 4.5 | 4.5 | 4.5 | | |
| 45.0 | 4.5 | 4.5 | 4.5 | 3.7 | |
| 50.0 | 3.8 | 4.4 | 4.4 | 3.6 | 2.7 |
| 55.0 | 2.8 | 3.4 | 3.9 | 3.5 | 2.7 |
| 60.0 | | 2.5 | 2.9 | 3.5 | 2.7 |
| 65.0 | | | | 2.7 | |
| θ（°） | 54～83 | 54～83 | 54～83 | 57～83 | 60～83 |
| 標準フック | 22 ton | | | | |
| フック重量 | 880 kg | | | | |
| 巻掛本数 | 2本 | | | | |

（単位：ton）

■50mブーム+4.35m+47mヘビーリフトジブ　B性能

| 作業半径 | 10° | 20° | 30° | 45° | 60° |
|---|---|---|---|---|---|
| 26.0（m） | 3.3 | | | | |
| 28.0 | 3.3 | | | | |
| 30.0 | 3.3 | | | | |
| 32.0 | 3.3 | | | | |
| 34.0 | 3.3 | 3.3 | | | |
| 36.0 | 3.3 | 3.3 | | | |
| 38.0 | 3.3 | 3.3 | | | |
| 40.0 | 3.3 | 3.3 | 3.1 | | |
| 45.0 | 3.3 | 3.3 | 3.1 | | |
| 50.0 | 3.3 | 3.1 | 3.1 | 2.5 | |
| 55.0 | 2.5 | 2.8 | 2.8 | 2.4 | 1.6 |
| 60.0 | 1.7 | 2.3 | 2.7 | 2.4 | 1.6 |
| 65.0 | | | 2.1 | 2.4 | 1.6 |
| 70.0 | | | | 2.0 | 1.6 |
| θ（°） | 55～83 | 56～83 | 56～83 | 57～83 | 60～83 |
| 標準フック | 22 ton | | | | |
| フック重量 | 880 kg | | | | |
| 巻掛本数 | 2本 | | | | |

（単位：ton）


ojk-inc.com

OJK All Terrain Crane
KATO KA-2000
株式会社OJK［オージェーケー］

# ヘビーリフトジブ(12m・54m)

■ C性能

## 13.6m～50mブーム+4.35m

■13.6mブーム+4.35m+12mヘビーリフトジブ　C性能

| 作業半径 | 10° | 20° | 30° | 45° | 60° |
|---|---|---|---|---|---|
| 6.0(m) | 84.0 | | | | |
| 7.0 | 83.9 | | | | |
| 8.0 | 82.6 | 79.3 | | | |
| 9.0 | 79.7 | 75.3 | | | |
| 10.0 | 70.5 | 71.4 | 60.9 | | |
| 11.0 | 63.1 | 64.6 | 58.2 | | |
| 12.0 | 56.8 | 58.2 | 55.8 | 43.2 | |
| 14.0 | 45.1 | 46.2 | 47.2 | 40.9 | 31.9 |
| 16.0 | 36.4 | 37.3 | 38.1 | 39.0 | 31.2 |
| 18.0 | 30.2 | 30.8 | 31.4 | 32.2 | 30.9 |
| 20.0 | 25.5 | 26.0 | 26.4 | 26.9 | |
| 22.0 | 21.8 | 22.2 | 22.5 | 22.7 | |
| 24.0 | 18.8 | 19.1 | 19.3 | | |
| 26.0 | 16.4 | 16.5 | | | |
| θ(°) | 10～83 | 20～83 | 30～83 | 45～83 | 60～83 |
| 標準フック | 150 ton | | | | |
| フック重量 | 1850 kg | | | | |
| 巻掛本数 | 8本 | | | | |

(単位：ton)

■31.8mブーム+4.35m+12mヘビーリフトジブ　C性能

| 作業半径 | 10° | 20° | 30° | 45° | 60° |
|---|---|---|---|---|---|
| 9.0(m) | 40.0 | | | | |
| 10.0 | 39.5 | | | | |
| 11.0 | 38.8 | 34.9 | | | |
| 12.0 | 38.2 | 34.4 | | | |
| 14.0 | 37.0 | 33.6 | 30.6 | | |
| 16.0 | 32.9 | 32.8 | 30.0 | 26.2 | |
| 18.0 | 26.7 | 27.9 | 29.0 | 26.0 | 22.6 |
| 20.0 | 22.1 | 23.1 | 24.0 | 25.1 | 22.6 |
| 22.0 | 18.4 | 19.3 | 20.0 | 21.0 | 21.5 |
| 24.0 | 15.5 | 16.2 | 16.9 | 17.6 | 18.0 |
| 26.0 | 13.1 | 13.7 | 14.3 | 14.9 | 15.2 |
| 28.0 | 11.1 | 11.6 | 12.1 | 12.6 | |
| 30.0 | 9.4 | 9.9 | 10.2 | 9.5 | |
| 32.0 | 7.7 | 8.2 | 8.6 | 8.9 | |
| 34.0 | 6.2 | 6.7 | 7.0 | 7.3 | |
| 36.0 | 4.9 | 5.3 | 5.5 | | |
| 38.0 | 3.7 | 4.0 | 4.2 | | |
| θ(°) | 15～83 | 20～83 | 30～83 | 45～83 | 60～83 |
| 標準フック | 65 ton | | | | |
| フック重量 | 1000 kg | | | | |
| 巻掛本数 | 4本 | | | | |

(単位：ton)

■18.15mブーム+4.35m+12mヘビーリフトジブ　C性能

| 作業半径 | 10° | 20° | 30° | 45° | 60° |
|---|---|---|---|---|---|
| 7.0(m) | 77.0 | | | | |
| 8.0 | 77.0 | | | | |
| 9.0 | 77.0 | 77.0 | | | |
| 10.0 | 68.4 | 70.6 | | | |
| 11.0 | 60.9 | 62.8 | 60.7 | | |
| 12.0 | 54.6 | 56.4 | 58.1 | | |
| 14.0 | 43.0 | 44.4 | 45.7 | 43.5 | 34.0 |
| 16.0 | 34.4 | 35.5 | 36.5 | 37.8 | 33.2 |
| 18.0 | 28.2 | 29.1 | 29.9 | 30.9 | 31.5 |
| 20.0 | 23.5 | 24.2 | 24.9 | 25.6 | 26.0 |
| 22.0 | 19.9 | 20.4 | 21.0 | 21.5 | |
| 24.0 | 16.9 | 17.4 | 17.8 | 18.1 | |
| 26.0 | 14.5 | 14.9 | 15.2 | | |
| 28.0 | 12.5 | 12.8 | 12.9 | | |
| 30.0 | 10.8 | 11.0 | | | |
| 32.0 | 9.4 | | | | |
| θ(°) | 10～83 | 20～83 | 30～83 | 45～83 | 60～83 |
| 標準フック | 150 ton | | | | |
| フック重量 | 1850 kg | | | | |
| 巻掛本数 | 8本 | | | | |

(単位：ton)

■40.9mブーム+4.35m+54mヘビーリフトジブ　C性能

| 作業半径 | 10° | 20° | 30° | 45° | 60° |
|---|---|---|---|---|---|
| 26.0(m) | 3.8 | | | | |
| 28.0 | 3.8 | | | | |
| 30.0 | 3.8 | | | | |
| 32.0 | 3.8 | | | | |
| 34.0 | 3.8 | 3.7 | | | |
| 36.0 | 3.8 | 3.5 | | | |
| 38.0 | 3.8 | 3.3 | | | |
| 40.0 | 3.8 | 3.2 | | | |
| 45.0 | 3.4 | 2.8 | 2.4 | | |
| 50.0 | 3.0 | 2.5 | 2.2 | | |
| 55.0 | | 2.3 | 2.0 | 1.7 | |
| 60.0 | | | 1.9 | 1.6 | 1.5 |
| 65.0 | | | | 1.5 | 1.5 |
| 70.0 | | | | | 1.5 |
| θ(°) | 60～83 | 60～83 | 62～83 | 64～83 | 64～83 |
| 標準フック | 22 ton | | | | |
| フック重量 | 880 kg | | | | |
| 巻掛本数 | 2本 | | | | |

(単位：ton)

■22.7mブーム+4.35m+12mヘビーリフトジブ　C性能

| 作業半径 | 10° | 20° | 30° | 45° | 60° |
|---|---|---|---|---|---|
| 8.0(m) | 64.0 | | | | |
| 9.0 | 64.0 | | | | |
| 10.0 | 64.0 | 64.0 | | | |
| 11.0 | 59.1 | 61.4 | 63.6 | | |
| 12.0 | 52.9 | 54.9 | 56.9 | | |
| 14.0 | 41.3 | 42.9 | 44.5 | 46.4 | |
| 16.0 | 32.8 | 34.1 | 35.3 | 36.9 | 35.5 |
| 18.0 | 26.6 | 27.7 | 28.7 | 29.9 | 30.7 |
| 20.0 | 22.0 | 22.9 | 23.7 | 24.7 | 25.2 |
| 22.0 | 18.4 | 19.1 | 19.8 | 20.5 | 20.9 |
| 24.0 | 15.4 | 16.1 | 16.6 | 17.2 | |
| 26.0 | 13.1 | 13.6 | 14.0 | 14.4 | |
| 28.0 | 11.1 | 11.5 | 11.8 | 12.1 | |
| 30.0 | 9.4 | 9.7 | 10.0 | | |
| 32.0 | 7.8 | 8.1 | 8.2 | | |
| 34.0 | 6.3 | 6.5 | | | |
| 36.0 | 5.0 | | | | |
| θ(°) | 10～83 | 20～83 | 30～83 | 45～83 | 60～83 |
| 標準フック | 65 ton | | | | |
| フック重量 | 1000 kg | | | | |
| 巻掛本数 | 6本 | | | | |

(単位：ton)

■50mブーム+4.35m+54mヘビーリフトジブ　C性能

| 作業半径 | 10° | 20° | 30° | 45° |
|---|---|---|---|---|
| 28.0(m) | 2.5 | | | |
| 30.0 | 2.5 | | | |
| 32.0 | 2.5 | | | |
| 34.0 | 2.5 | | | |
| 36.0 | 2.5 | 2.5 | | |
| 38.0 | 2.5 | 2.5 | | |
| 40.0 | 2.5 | 2.5 | | |
| 45.0 | 2.5 | 2.5 | 2.4 | |
| 50.0 | | 2.5 | 2.2 | |
| 55.0 | | | 2.0 | 1.5 |
| θ(°) | 66～83 | 67～83 | 69～83 | 69～83 |
| 標準フック | 22 ton | | | |
| フック重量 | 880 kg | | | |
| 巻掛本数 | 2本 | | | |

(単位：ton)

# ヘビーリフトジブ(21m)

■ C性能

## 13.6m～50mブーム+4.35m

■13.6mブーム+4.35m+21mヘビーリフトジブ　C性能

| 作業半径 | 10° | 20° | 30° | 45° | 60° |
|---|---|---|---|---|---|
| 9.0(m) | 55.5 | | | | |
| 10.0 | 54.7 | | | | |
| 11.0 | 53.6 | | | | |
| 12.0 | 52.6 | | | | |
| 14.0 | 47.7 | 41.4 | | | |
| 16.0 | 38.8 | 37.7 | 33.0 | | |
| 18.0 | 32.3 | 33.5 | 30.7 | | |
| 20.0 | 27.5 | 28.5 | 28.7 | 22.9 | |
| 22.0 | 23.7 | 24.5 | 25.3 | 21.9 | 17.2 |
| 24.0 | 20.6 | 21.3 | 22.0 | 21.0 | 16.8 |
| 26.0 | 18.1 | 18.7 | 19.3 | 20.1 | 16.5 |
| 28.0 | 16.0 | 16.5 | 17.0 | 17.6 | |
| 30.0 | 14.2 | 14.7 | 15.0 | 15.4 | |
| 32.0 | 12.7 | 13.0 | 13.3 | | |
| 34.0 | 11.4 | 11.6 | 11.8 | | |
| 36.0 | 10.3 | | | | |
| θ(°) | 10～83 | 20～83 | 30～83 | 45～83 | 60～83 |
| 標準フック | 65 ton | | | | |
| フック重量 | 1000 kg | | | | |
| 巻掛本数 | 6本 | | | | |

(単位：ton)

■31.8mブーム+4.35m+21mヘビーリフトジブ　C性能

| 作業半径 | 10° | 20° | 30° | 45° | 60° |
|---|---|---|---|---|---|
| 14.0(m) | 27.0 | | | | |
| 16.0 | 27.0 | 25.0 | | | |
| 18.0 | 27.0 | 24.1 | | | |
| 20.0 | 24.1 | 23.4 | 21.1 | | |
| 22.0 | 20.4 | 21.8 | 20.6 | | |
| 24.0 | 17.3 | 18.6 | 19.8 | 17.2 | |
| 26.0 | 14.8 | 16.0 | 17.0 | 17.0 | 14.3 |
| 28.0 | 12.7 | 13.8 | 14.7 | 15.9 | 14.2 |
| 30.0 | 11.0 | 11.9 | 12.7 | 13.8 | 14.2 |
| 32.0 | 9.5 | 10.3 | 11.0 | 11.9 | 12.5 |
| 34.0 | 8.1 | 8.9 | 9.5 | 10.3 | 10.7 |
| 36.0 | 6.8 | 7.6 | 8.2 | 8.9 | 9.2 |
| 38.0 | 5.6 | 6.4 | 7.0 | 7.6 | |
| 40.0 | 4.5 | 5.2 | 5.8 | 6.3 | |
| 45.0 | | | 3.0 | | |
| θ(°) | 33～83 | 34～83 | 35～83 | 45～83 | 60～83 |
| 標準フック | 65 ton | | | | |
| フック重量 | 1000 kg | | | | |
| 巻掛本数 | 4本 | | | | |

(単位：ton)

■18.15mブーム+4.35m+21mヘビーリフトジブ　C性能

| 作業半径 | 10° | 20° | 30° | 45° | 60° |
|---|---|---|---|---|---|
| 10.0(m) | 53.0 | | | | |
| 11.0 | 53.0 | | | | |
| 12.0 | 53.0 | | | | |
| 14.0 | 46.0 | 43.3 | | | |
| 16.0 | 37.1 | 38.9 | | | |
| 18.0 | 30.7 | 32.2 | 32.0 | | |
| 20.0 | 25.8 | 27.1 | 28.4 | 24.2 | |
| 22.0 | 22.1 | 23.2 | 24.2 | 23.2 | 18.1 |
| 24.0 | 19.0 | 20.0 | 20.9 | 22.1 | 17.7 |
| 26.0 | 16.5 | 17.3 | 18.1 | 19.1 | 17.4 |
| 28.0 | 14.4 | 15.1 | 15.8 | 16.6 | 17.2 |
| 30.0 | 12.6 | 13.3 | 13.8 | 14.5 | |
| 32.0 | 11.1 | 11.6 | 12.1 | 12.6 | |
| 34.0 | 9.8 | 10.2 | 10.6 | 10.9 | |
| 36.0 | 8.7 | 9.0 | 9.3 | | |
| 38.0 | 7.7 | 7.9 | 8.0 | | |
| 40.0 | 6.7 | 6.8 | | | |
| θ(°) | 10～83 | 20～83 | 30～83 | 45～83 | 60～83 |
| 標準フック | 65 ton | | | | |
| フック重量 | 1000 kg | | | | |
| 巻掛本数 | 6本 | | | | |

(単位：ton)

■40.9mブーム+4.35m+21mヘビーリフトジブ　C性能

| 作業半径 | 10° | 20° | 30° | 45° | 60° |
|---|---|---|---|---|---|
| 16.0(m) | 16.0 | | | | |
| 18.0 | 16.0 | 16.0 | | | |
| 20.0 | 16.0 | 16.0 | | | |
| 22.0 | 16.0 | 16.0 | 16.0 | | |
| 24.0 | 16.0 | 16.0 | 16.0 | | |
| 26.0 | 14.7 | 15.9 | 16.0 | 16.0 | |
| 28.0 | 12.6 | 13.7 | 14.7 | 16.0 | 14.7 |
| 30.0 | 10.8 | 11.8 | 12.7 | 13.9 | 14.6 |
| 32.0 | 9.3 | 10.2 | 11.0 | 12.0 | 12.7 |
| 34.0 | 7.9 | 8.8 | 9.5 | 10.4 | 11.0 |
| 36.0 | 6.6 | 7.5 | 8.2 | 9.0 | 9.5 |
| 38.0 | 5.3 | 6.2 | 7.0 | 7.7 | 8.1 |
| 40.0 | 4.2 | 5.0 | 5.8 | 6.5 | |
| 45.0 | 1.9 | 2.5 | 3.1 | 3.6 | |
| θ(°) | 47～83 | 47～83 | 48～83 | 48～83 | 60～83 |
| 標準フック | 22 ton | | | | |
| フック重量 | 880 kg | | | | |
| 巻掛本数 | 2本 | | | | |

(単位：ton)

■22.7mブーム+4.35m+21mヘビーリフトジブ　C性能

| 作業半径 | 10° | 20° | 30° | 45° | 60° |
|---|---|---|---|---|---|
| 11.0(m) | 44.0 | | | | |
| 12.0 | 44.0 | | | | |
| 14.0 | 44.0 | | | | |
| 16.0 | 36.0 | 38.1 | | | |
| 18.0 | 29.6 | 31.4 | 33.1 | | |
| 20.0 | 24.8 | 26.3 | 27.8 | | |
| 22.0 | 21.0 | 22.3 | 23.6 | 25.2 | |
| 24.0 | 17.9 | 19.1 | 20.2 | 21.6 | 19.1 |
| 26.0 | 15.4 | 16.4 | 17.4 | 18.6 | 18.7 |
| 28.0 | 13.3 | 14.2 | 15.0 | 16.1 | 16.8 |
| 30.0 | 11.5 | 12.3 | 13.0 | 13.9 | 14.4 |
| 32.0 | 10.0 | 10.7 | 11.3 | 12.0 | 12.4 |
| 34.0 | 8.7 | 9.3 | 9.8 | 10.3 | |
| 36.0 | 7.5 | 8.0 | 8.4 | | |
| 38.0 | 6.3 | 6.8 | 7.2 | | |
| 40.0 | 5.2 | 5.6 | | | |
| θ(°) | 10～83 | 20～83 | 30～83 | 45～83 | 60～83 |
| 標準フック | 65 ton | | | | |
| フック重量 | 1000 kg | | | | |
| 巻掛本数 | 4本 | | | | |

(単位：ton)

■50mブーム+4.35m+21mヘビーリフトジブ　C性能

| 作業半径 | 10° | 20° | 30° | 45° | 60° |
|---|---|---|---|---|---|
| 16.0(m) | 9.5 | | | | |
| 18.0 | 9.5 | | | | |
| 20.0 | 9.5 | 9.5 | | | |
| 22.0 | 9.5 | 9.5 | | | |
| 24.0 | 9.5 | 9.5 | 9.5 | | |
| 26.0 | 9.5 | 9.5 | 9.5 | 9.1 | |
| 28.0 | 9.5 | 9.5 | 9.5 | 9.0 | |
| 30.0 | 9.5 | 9.5 | 9.5 | 8.9 | 7.4 |
| 32.0 | 8.9 | 9.5 | 9.5 | 8.8 | 7.4 |
| 34.0 | 7.5 | 8.5 | 9.3 | 8.8 | 7.4 |
| 36.0 | 6.1 | 7.2 | 8.0 | 8.8 | 7.4 |
| 38.0 | 4.9 | 5.9 | 6.7 | 7.7 | 7.4 |
| 40.0 | 3.8 | 4.7 | 5.5 | 6.4 | 6.9 |
| 45.0 | | 2.2 | 2.8 | 3.6 | |
| θ(°) | 56～83 | 56～83 | 58～83 | 59～83 | 60～83 |
| 標準フック | 22 ton | | | | |
| フック重量 | 880 kg | | | | |
| 巻掛本数 | 2本 | | | | |

(単位：ton)



ojk-inc.com

OJK All Terrain Crane
KATO KA-2000
株式会社OJK［オージェーケー］

# ヘビーリフトジブ(30m)

## ■ C性能

### 13.6m~50mブーム+4.35m

■13.6mブーム+4.35m+30mヘビーリフトジブ　C性能

| 作業半径 | 10° | 20° | 30° | 45° | 60° |
|---|---|---|---|---|---|
| 14.0(m) | 33.0 | | | | |
| 16.0 | 32.4 | | | | |
| 18.0 | 31.8 | 29.5 | | | |
| 20.0 | 28.8 | 27.1 | | | |
| 22.0 | 24.9 | 25.1 | 22.2 | | |
| 24.0 | 21.8 | 22.8 | 20.8 | | |
| 26.0 | 19.3 | 20.1 | 19.6 | | |
| 28.0 | 17.1 | 17.9 | 18.5 | 15.0 | |
| 30.0 | 15.3 | 16.0 | 16.7 | 14.3 | 11.2 |
| 32.0 | 13.7 | 14.3 | 14.9 | 13.8 | 10.9 |
| 34.0 | 12.4 | 12.9 | 13.4 | 13.3 | 10.6 |
| 36.0 | 11.2 | 11.6 | 12.1 | 12.7 | 10.5 |
| 38.0 | 10.1 | 10.5 | 10.9 | 11.4 | |
| 40.0 | | 9.5 | 9.8 | 10.1 | |
| θ(°) | 10~83 | 20~83 | 30~83 | 45~83 | 60~83 |
| 標準フック | 65 ton | | | | |
| フック重量 | 1000 kg | | | | |
| 巻掛本数 | 4本 | | | | |

(単位：ton)

■31.8mブーム+4.35m+30mヘビーリフトジブ　C性能

| 作業半径 | 10° | 20° | 30° | 45° | 60° |
|---|---|---|---|---|---|
| 16.0(m) | 19.0 | | | | |
| 18.0 | 18.6 | | | | |
| 20.0 | 18.4 | | | | |
| 22.0 | 18.2 | 18.2 | | | |
| 24.0 | 18.0 | 18.0 | | | |
| 26.0 | 16.4 | 17.6 | 15.8 | | |
| 28.0 | 14.2 | 15.6 | 15.4 | | |
| 30.0 | 12.4 | 13.7 | 14.9 | 12.7 | |
| 32.0 | 10.8 | 12.0 | 13.1 | 12.5 | |
| 34.0 | 9.5 | 10.5 | 11.5 | 12.3 | 10.1 |
| 36.0 | 8.3 | 9.2 | 10.1 | 11.3 | 10.1 |
| 38.0 | 7.2 | 8.1 | 8.9 | 10.0 | 10.0 |
| 40.0 | 6.1 | 7.1 | 7.8 | 8.8 | 9.4 |
| 45.0 | 3.7 | 4.6 | 5.3 | 6.2 | 6.5 |
| 50.0 | | 2.5 | 3.0 | 3.6 | |
| θ(°) | 38~83 | 38~83 | 38~83 | 45~83 | 60~83 |
| 標準フック | 22 ton | | | | |
| フック重量 | 880 kg | | | | |
| 巻掛本数 | 2本 | | | | |

(単位：ton)

■18.15mブーム+4.35m+30mヘビーリフトジブ　C性能

| 作業半径 | 10° | 20° | 30° | 45° | 60° |
|---|---|---|---|---|---|
| 14.0(m) | 32.0 | | | | |
| 16.0 | 32.0 | | | | |
| 18.0 | 32.0 | 30.6 | | | |
| 20.0 | 27.5 | 28.3 | | | |
| 22.0 | 23.6 | 25.1 | 23.1 | | |
| 24.0 | 20.5 | 21.8 | 21.8 | | |
| 26.0 | 17.9 | 19.1 | 20.2 | | |
| 28.0 | 15.8 | 16.8 | 17.8 | 15.8 | |
| 30.0 | 13.9 | 14.9 | 15.8 | 15.2 | |
| 32.0 | 12.4 | 13.2 | 14.0 | 14.7 | 11.5 |
| 34.0 | 11.0 | 11.7 | 12.5 | 13.4 | 11.3 |
| 36.0 | 9.8 | 10.5 | 11.1 | 12.0 | 11.1 |
| 38.0 | 8.8 | 9.3 | 9.9 | 10.6 | 11.0 |
| 40.0 | 7.8 | 8.3 | 8.8 | 9.4 | |
| 45.0 | 5.8 | 6.2 | 6.5 | | |
| 50.0 | 4.0 | | | | |
| θ(°) | 10~83 | 20~83 | 30~83 | 45~83 | 60~83 |
| 標準フック | 65 ton | | | | |
| フック重量 | 1000 kg | | | | |
| 巻掛本数 | 4本 | | | | |

(単位：ton)

■40.9mブーム+4.35m+30mヘビーリフトジブ　C性能

| 作業半径 | 10° | 20° | 30° | 45° | 60° |
|---|---|---|---|---|---|
| 18.0(m) | 11.5 | | | | |
| 20.0 | 11.5 | | | | |
| 22.0 | 11.5 | | | | |
| 24.0 | 11.0 | 11.0 | | | |
| 26.0 | 11.0 | 11.0 | | | |
| 28.0 | 11.0 | 11.0 | 11.0 | | |
| 30.0 | 11.0 | 11.0 | 11.0 | | |
| 32.0 | 10.3 | 11.0 | 11.0 | 11.0 | |
| 34.0 | 9.0 | 10.1 | 11.0 | 11.0 | |
| 36.0 | 7.7 | 8.8 | 9.8 | 11.0 | 10.2 |
| 38.0 | 6.5 | 7.7 | 8.6 | 9.8 | 10.2 |
| 40.0 | 5.4 | 6.6 | 7.5 | 8.6 | 9.4 |
| 45.0 | 3.0 | 4.0 | 5.0 | 6.0 | 6.6 |
| 50.0 | | | 2.7 | 3.5 | |
| θ(°) | 52~83 | 52~83 | 54~83 | 57~83 | 60~83 |
| 標準フック | 22 ton | | | | |
| フック重量 | 880 kg | | | | |
| 巻掛本数 | 2本 | | | | |

(単位：ton)

■22.7mブーム+4.35m+30mヘビーリフトジブ　C性能

| 作業半径 | 10° | 20° | 30° | 45° | 60° |
|---|---|---|---|---|---|
| 14.0(m) | 30.0 | | | | |
| 16.0 | 30.0 | | | | |
| 18.0 | 30.0 | | | | |
| 20.0 | 26.3 | 28.4 | | | |
| 22.0 | 22.5 | 24.2 | | | |
| 24.0 | 19.3 | 20.9 | 22.4 | | |
| 26.0 | 16.8 | 18.2 | 19.5 | | |
| 28.0 | 14.6 | 15.9 | 17.1 | 16.4 | |
| 30.0 | 12.8 | 13.9 | 15.0 | 15.8 | |
| 32.0 | 11.2 | 12.2 | 13.2 | 14.6 | 12.0 |
| 34.0 | 9.9 | 10.8 | 11.7 | 12.9 | 11.7 |
| 36.0 | 8.7 | 9.5 | 10.3 | 11.3 | 11.5 |
| 38.0 | 7.6 | 8.4 | 9.1 | 10.0 | 10.6 |
| 40.0 | 6.6 | 7.3 | 8.0 | 8.8 | 9.2 |
| 45.0 | 4.3 | 5.0 | 5.5 | 6.1 | |
| θ(°) | 24~83 | 26~83 | 30~83 | 45~83 | 60~83 |
| 標準フック | 65 ton | | | | |
| フック重量 | 1000 kg | | | | |
| 巻掛本数 | 4本 | | | | |

(単位：ton)

■50mブーム+4.35m+30mヘビーリフトジブ　C性能

| 作業半径 | 10° | 20° | 30° | 45° | 60° |
|---|---|---|---|---|---|
| 20.0(m) | 6.6 | | | | |
| 22.0 | 6.6 | | | | |
| 24.0 | 6.6 | 6.6 | | | |
| 26.0 | 6.6 | 6.6 | | | |
| 28.0 | 6.6 | 6.6 | 6.6 | | |
| 30.0 | 6.6 | 6.6 | 6.6 | | |
| 32.0 | 6.6 | 6.6 | 6.6 | | |
| 34.0 | 6.6 | 6.6 | 6.6 | 5.8 | |
| 36.0 | 6.6 | 6.6 | 6.6 | 5.8 | |
| 38.0 | 6.0 | 6.5 | 6.6 | 5.7 | 4.5 |
| 40.0 | 4.9 | 6.2 | 6.5 | 5.6 | 4.5 |
| 45.0 | | 3.6 | 4.6 | 5.6 | 4.5 |
| 50.0 | | | | 3.4 | 4.0 |
| θ(°) | 58~83 | 59~83 | 60~83 | 60~83 | 60~83 |
| 標準フック | 22 ton | | | | |
| フック重量 | 880 kg | | | | |
| 巻掛本数 | 2本 | | | | |

(単位：ton)

# ヘビーリフトジブ(40m・47m)

## ■ C性能

### 31.8m~50mブーム+4.35m

■31.8mブーム+4.35m+40mヘビーリフトジブ　C性能

| 作業半径 | 10° | 20° | 30° | 45° | 60° |
|---|---|---|---|---|---|
| 20.0(m) | 11.0 | | | | |
| 22.0 | 11.0 | | | | |
| 24.0 | 11.0 | | | | |
| 26.0 | 11.0 | 11.0 | | | |
| 28.0 | 11.0 | 11.0 | | | |
| 30.0 | 11.0 | 11.0 | | | |
| 32.0 | 11.0 | 11.0 | 10.7 | | |
| 34.0 | 10.6 | 11.0 | 10.2 | | |
| 36.0 | 9.4 | 10.7 | 9.7 | | |
| 38.0 | 8.3 | 9.5 | 9.3 | 7.8 | |
| 40.0 | 7.4 | 8.4 | 8.9 | 7.5 | |
| 45.0 | 5.2 | 6.3 | 7.1 | 7.0 | 6.2 |
| 50.0 | 3.3 | 4.3 | 5.2 | 6.2 | 6.0 |
| 55.0 | 1.7 | 2.5 | 3.3 | 4.2 | 4.7 |
| 60.0 | | | 1.6 | 2.3 | |
| θ(°) | 40~83 | 42~83 | 42~83 | 45~83 | 60~83 |
| 標準フック | 22 ton | | | | |
| フック重量 | 880 kg | | | | |
| 巻掛本数 | 2本 | | | | |

(単位：ton)

■31.8mブーム+4.35m+47mヘビーリフトジブ　C性能

| 作業半径 | 10° | 20° | 30° | 45° | 60° |
|---|---|---|---|---|---|
| 22.0(m) | 7.5 | | | | |
| 24.0 | 7.5 | | | | |
| 26.0 | 7.5 | | | | |
| 28.0 | 7.5 | | | | |
| 30.0 | 7.5 | 7.3 | | | |
| 32.0 | 7.5 | 7.0 | | | |
| 34.0 | 7.5 | 6.7 | | | |
| 36.0 | 7.3 | 6.5 | 5.8 | | |
| 38.0 | 7.0 | 6.2 | 5.6 | | |
| 40.0 | 6.7 | 6.0 | 5.5 | | |
| 45.0 | 5.7 | 5.5 | 5.0 | 4.5 | |
| 50.0 | 3.8 | 5.0 | 4.8 | 4.4 | 4.2 |
| 55.0 | 2.3 | 3.3 | 4.3 | 4.2 | 4.1 |
| 60.0 | | 1.8 | 2.6 | 3.7 | 4.1 |
| 65.0 | | | | 2.0 | |
| θ(°) | 50~83 | 50~83 | 50~83 | 53~83 | 60~83 |
| 標準フック | 22 ton | | | | |
| フック重量 | 880 kg | | | | |
| 巻掛本数 | 2本 | | | | |

(単位：ton)

■40.9mブーム+4.35m+40mヘビーリフトジブ　C性能

| 作業半径 | 10° | 20° | 30° | 45° | 60° |
|---|---|---|---|---|---|
| 22.0(m) | 7.5 | | | | |
| 24.0 | 7.5 | | | | |
| 26.0 | 7.5 | | | | |
| 28.0 | 7.5 | 7.5 | | | |
| 30.0 | 7.5 | 7.5 | | | |
| 32.0 | 7.5 | 7.5 | | | |
| 34.0 | 7.5 | 7.5 | 7.5 | | |
| 36.0 | 7.5 | 7.5 | 7.5 | | |
| 38.0 | 7.5 | 7.5 | 7.5 | | |
| 40.0 | 6.8 | 7.5 | 7.5 | 7.5 | |
| 45.0 | 4.4 | 5.7 | 6.8 | 7.2 | 6.3 |
| 50.0 | 2.5 | 3.6 | 4.7 | 6.0 | 6.1 |
| 55.0 | | 1.9 | 2.8 | 4.0 | 4.7 |
| 60.0 | | | | 2.1 | |
| θ(°) | 53~83 | 53~83 | 54~83 | 57~83 | 60~83 |
| 標準フック | 22 ton | | | | |
| フック重量 | 880 kg | | | | |
| 巻掛本数 | 2本 | | | | |

(単位：ton)

■40.9mブーム+4.35m+47mヘビーリフトジブ　C性能

| 作業半径 | 10° | 20° | 30° | 45° | 60° |
|---|---|---|---|---|---|
| 24.0(m) | 5.5 | | | | |
| 26.0 | 5.5 | | | | |
| 28.0 | 5.5 | | | | |
| 30.0 | 5.5 | | | | |
| 32.0 | 5.5 | 5.5 | | | |
| 34.0 | 5.5 | 5.5 | | | |
| 36.0 | 5.5 | 5.5 | | | |
| 38.0 | 5.5 | 5.5 | 5.5 | | |
| 40.0 | 5.5 | 5.5 | 5.5 | | |
| 45.0 | 5.0 | 5.5 | 5.2 | | |
| 50.0 | 3.0 | 4.4 | 4.9 | 4.4 | |
| 55.0 | | 2.6 | 3.8 | 4.3 | 4.1 |
| 60.0 | | | 2.1 | 3.4 | 4.1 |
| 65.0 | | | | 1.7 | 2.3 |
| θ(°) | 57~83 | 58~83 | 59~83 | 59~83 | 60~83 |
| 標準フック | 22 ton | | | | |
| フック重量 | 880 kg | | | | |
| 巻掛本数 | 2本 | | | | |

(単位：ton)

■50mブーム+4.35m+40mヘビーリフトジブ　C性能

| 作業半径 | 10° | 20° | 30° | 45° | 60° |
|---|---|---|---|---|---|
| 24.0(m) | 4.5 | | | | |
| 26.0 | 4.5 | | | | |
| 28.0 | 4.5 | | | | |
| 30.0 | 4.5 | 4.5 | | | |
| 32.0 | 4.5 | 4.5 | | | |
| 34.0 | 4.5 | 4.5 | | | |
| 36.0 | 4.5 | 4.5 | 4.5 | | |
| 38.0 | 4.5 | 4.5 | 4.5 | | |
| 40.0 | 4.5 | 4.5 | 4.5 | | |
| 45.0 | 3.8 | 4.5 | 4.5 | 3.7 | |
| 50.0 | 1.8 | 3.1 | 4.3 | 3.6 | 2.7 |
| 55.0 | | | 2.4 | 3.5 | 2.7 |
| 60.0 | | | | 1.9 | 2.5 |
| θ(°) | 58~83 | 59~83 | 62~83 | 62~83 | 64~83 |
| 標準フック | 22 ton | | | | |
| フック重量 | 880 kg | | | | |
| 巻掛本数 | 2本 | | | | |

(単位：ton)

■50mブーム+4.35m+47mヘビーリフトジブ　C性能

| 作業半径 | 10° | 20° | 30° | 45° | 60° |
|---|---|---|---|---|---|
| 26.0(m) | 3.3 | | | | |
| 28.0 | 3.3 | | | | |
| 30.0 | 3.3 | | | | |
| 32.0 | 3.3 | | | | |
| 34.0 | 3.3 | 3.3 | | | |
| 36.0 | 3.3 | 3.3 | | | |
| 38.0 | 3.3 | 3.3 | | | |
| 40.0 | 3.3 | 3.3 | 3.1 | | |
| 45.0 | 3.3 | 3.3 | 3.1 | | |
| 50.0 | | 3.1 | 3.1 | 2.5 | |
| 55.0 | | | 2.8 | 2.4 | 1.6 |
| 60.0 | | | | 2.4 | 1.6 |
| θ(°) | 64~83 | 65~83 | 65~83 | 67~83 | 67~83 |
| 標準フック | 22 ton | | | | |
| フック重量 | 880 kg | | | | |
| 巻掛本数 | 2本 | | | | |

(単位：ton)


ojk-inc.com